16601056
Edition 2
October 2013

Air Angle Wrench and Nut Runner

QA6 and QA8 Series

Maintenance Information

Save These Instructions

Ingersoll Rand®

Product Safety Information

WARNING

- Failure to observe the following warnings, and to avoid these potentially hazardous situations, could result in death or serious injury.
- Read and understand this and all other supplied manuals before installing, operating, repairing, maintaining, changing accessories on, or working near this product.
- Always wear eye protection when operating or performing maintenance on this tool. The grade of protection required should be assessed for each use and may include impact-resistant glasses with side shields, goggles, or a full face shield over those glasses.
- Always turn off the air supply, bleed the air pressure and disconnect the air supply hose when not in use, before installing, removing or adjusting any accessory on this tool, or before performing any maintenance on this tool or any accessory.

Note: *When reading the instructions, refer to exploded diagrams in Parts Information Manuals when applicable (see under Related Documentation for form numbers).*

ASSEMBLY DISASSEMBLY INSTRUCTIONS

Throttle Housing

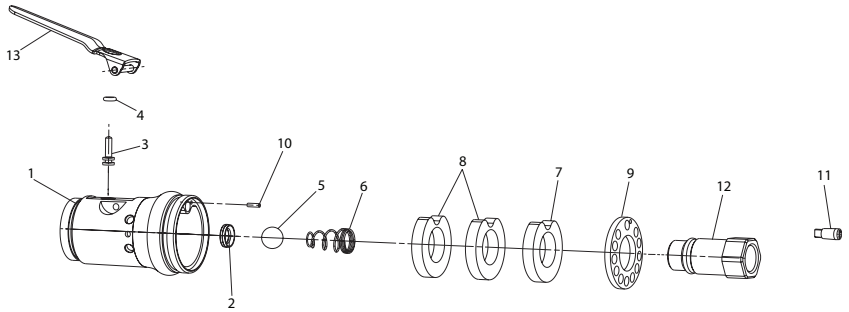

(Dwg. RG_80223480)

Throttle Housing Module

Item	Part Description	Part Number			
	Throttle Housing Module	**QA6-NPT-A231**	**QA6-BSP-A231**	**QA8-NPT-A231**	**QA8-BSP-A231**
1	Throttle Housing				
2	Ball Seat 12 mm				
3	Throttle Pin				
4	O-Ring 3.4 mm				
5	Ball 12 mm				
6	Ball Spring				
7	Muffler Black	QA8-311 (1)	QA8-311 (1)	QA8-311 (2)	QA8-311 (2)
8	Muffler White	QA6-311 (2)	QA6-311 (2)		
9	Diffuser Plate				
10	Pin 2 mm				
11	Chip Holder Assembly	QA4-A528	QA4-A528	QA4-A528	QA4-A528
12	Inlet Bushing Assembly	QA6-NPT-A465	QA6-BSP-A465	QA6-NPT-A465	QA6-BSP-A465
13	Lever Assembly	QA6-A93	QA6-A93	QA6-A93	QA6-A93

Tooling Required

Specific Tooling

- Ball Seat Assembly tool (OM127): This tool Is Required to Press Ball Seat (2) Into Throttle Housing (1).

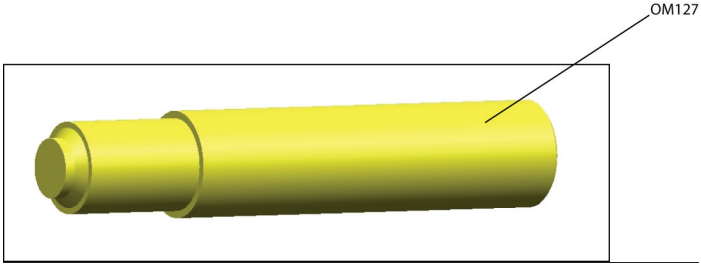

Standard tools and Products

- O-ring Lube (**Ingersoll Rand** No. 68)
- Vice
- Needle Nose Pliers
- Spanner Wrench
- torque Wrench
- Punch
- Hammer

Subassemblies

Inlet Bushing Assembly Exploded View

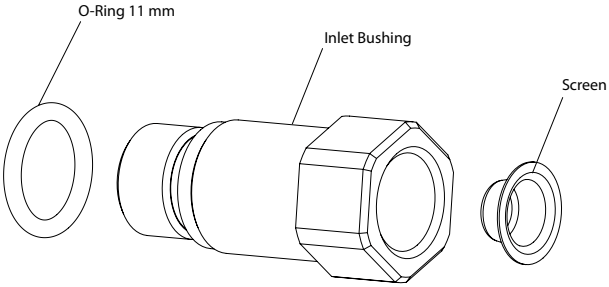

(Dwg. RG_45504578)

Inlet Bushing Assembly Parts List

Item	Part Description	Part Number	
12	**Inlet Bushing Assembly**	**QA6-NPT-A465**	**QA6-BSP-A465**
12A	Inlet Bushing Assembly		
12B	O-Ring 11 mm		
12C	Screen		

Inlet Bushing Assembly Instructions

1. Mount screen (12C) into inlet bushing (12A) screen placement face. See section view for the proper placement.

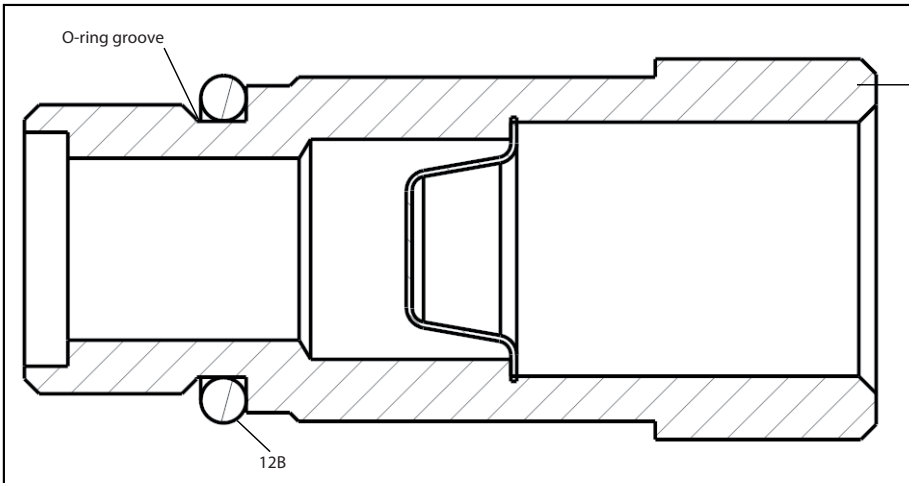

2. Coat o-ring (12B) with o-ring lube and mount on inlet bushing (12A) O-ring groove. See section view for the proper placement.

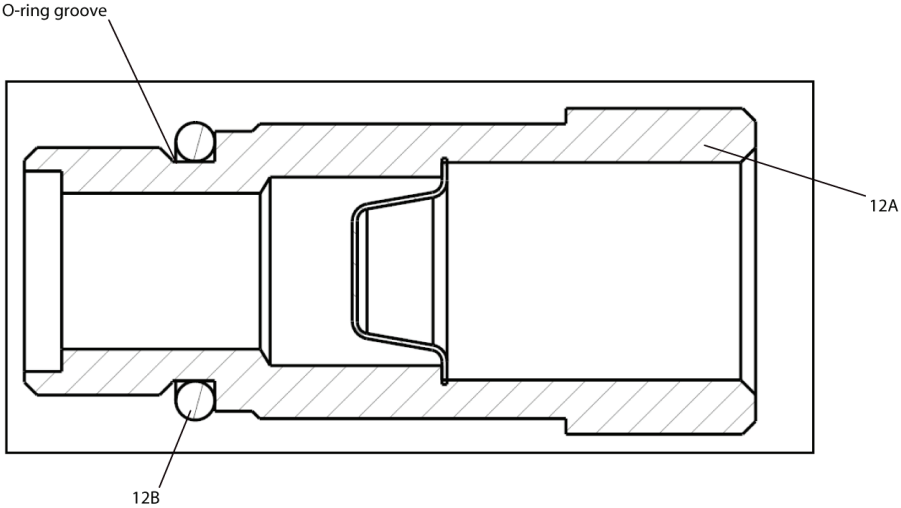

Lever Assembly Exploded View

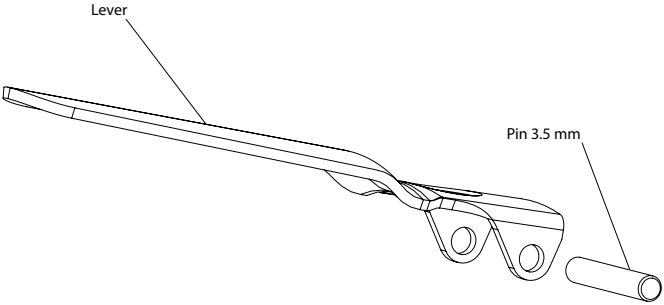

(Dwg. RG_45504586)

Lever Assembly Parts List

Item	Part Description	Part Number
13	**Lever**	**QA6-A93**
13A	Lever	
13B	Pin 3.5 mm	

Throttle Housing Module Assembly Instructions

1. Coat Ball Seat holding diameter of tool (OM127) with O-ring Grease.

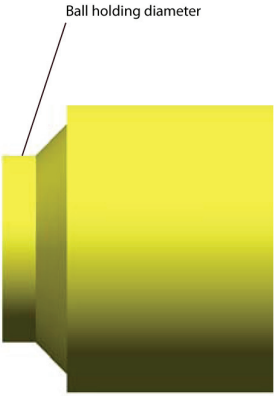

2. Hold Ball Seat (2) on Ball Seat Assembly tool (OM127) as shown in picture below.

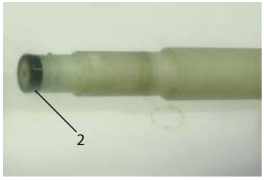

3. Press Ball Seat (2) with Ball Seat Assembly tool into Throttle Housing by using manual press. See Section view for the proper placement.

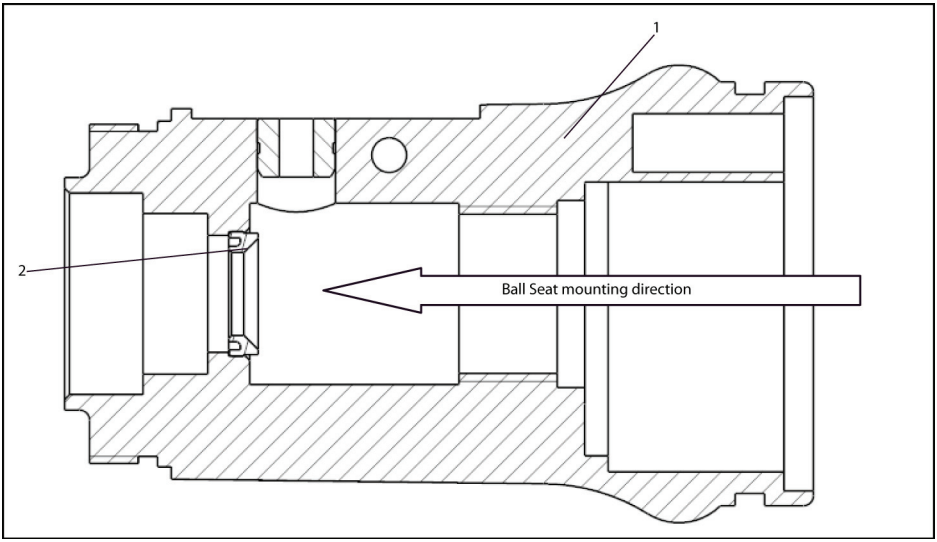

4. Insert pin (10) into pin hole in throttle housing and press to full depth by manual press, or hammer and punch.

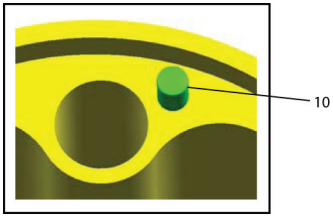

5. Put chip holder assembly (11) into Chip holder assembly hole in throttle housing (1) so that leads are showing.

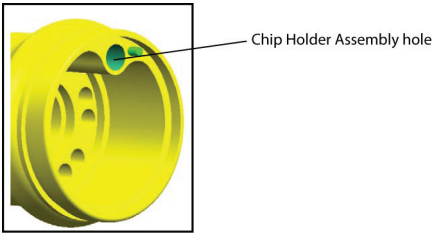

6. Coat O-ring (4) with O-ring lube and place over Throttle Pin (3).

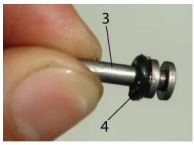

7. Install throttle pin (3) with O-ring in throttle housing (1) using needle nose pliers. Adjust to get throttle pin into throttle bush. Throttle pin must be visible from outside over throttle housing bush area.

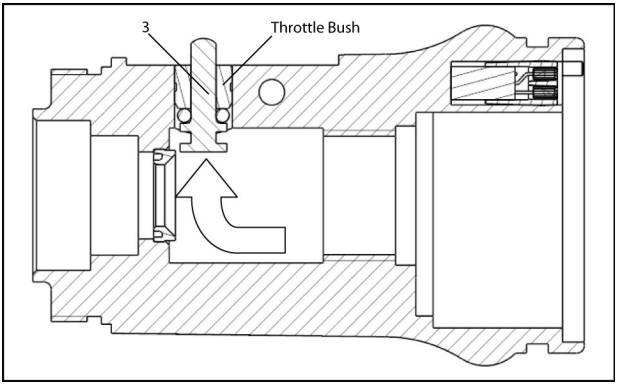

8. Insert ball (5) in Throttle Housing (1). Make sure, ball sits under Throttle Pin (3).

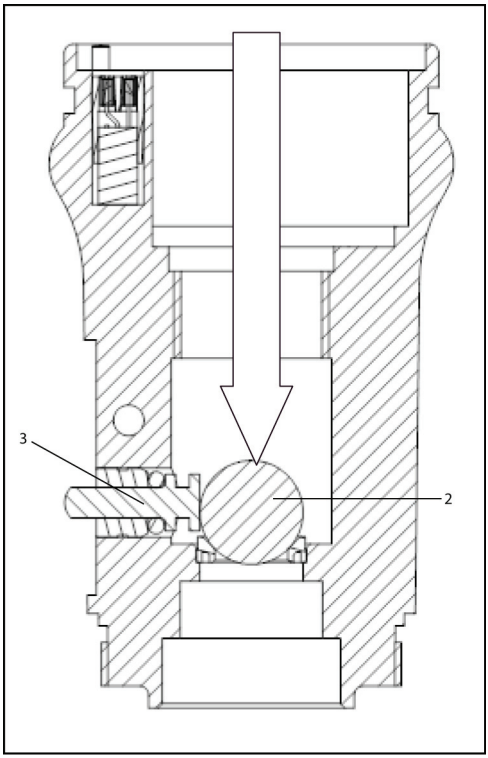

9. **for QA6**
   Note: Muffler (7) must face Input of tool.
   Place Muffler (8), Qty # 2 and Muffler (7), Qty # 1 in the Throttle Housing (1). Align Mufflers to match Throttle Housing Profile.

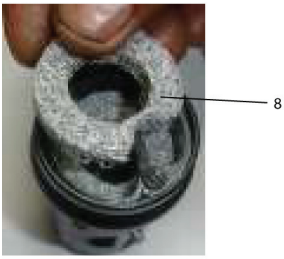

For QA8
   Place Muffler (7), Qty # 2 in the Throttle Housing (1). Align Mufflers to match Throttle Housing profile.

10. Place Diffuser Plate (9) on Throttle Housing. Align Pin (10) in Throttle Housing with Diffuser Plate Pin Hole.

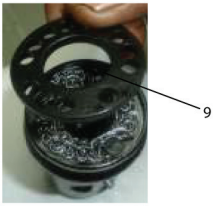

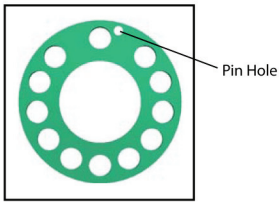

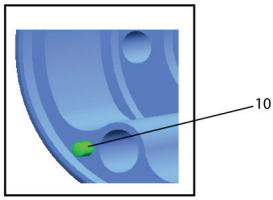

11. Grease Ball Spring (6) Ground Face and Mount on Inlet Bushing Assembly (12) Mounting Face.

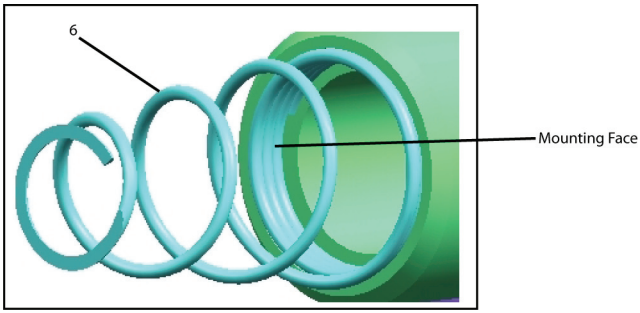

12. Align Ball Spring above Ball (5) and Thread into Throttle Housing (1).
13. Align Ball Spring above Ball (5) and Thread into Throttle Housing (1).
14. Hold Throttle Housing on vice. Place Lever (13a) over Throttle Housing and Assemble Pin (13b) using a Punch and Hammer.

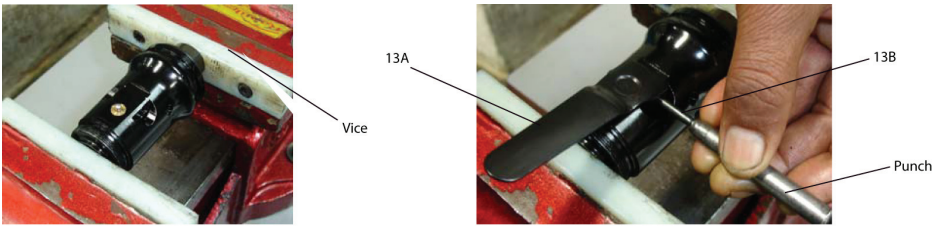

Remote Housing Module Exploded View

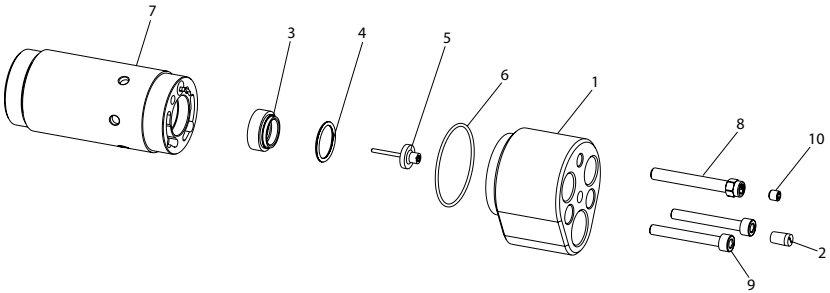

(Dwg. RG_45500816)

Remote Housing Module Parts List

Item	Part Description	Part Number	
	Remote Housing Assembly	**QA6-R-A40**	**QA8-R-A40**
1	Remote Start Housing		
2	Chip Holder Assembly	QA4-A528	QA4-A528
3	Valve Seat		
*	Remote housing Tune Up kit	QA6-1R-K40	QA8-1R-K40
4	O-Ring 15.6 mm		
5	Shut off Valve	131128	131128
6	O-Ring 40 mm		
7	Remote Motor Housing		
8	Remote Screw M6	QA6-439	QA6-439
9	Screw M5	QA6-439-1 (2)	QA6-439-1 (2)
10	Set Screw M5		

Tooling Required

Standard tools and Products:

- **Ingersoll Rand** # 68 Grease
- torque Wrench

Subassemblies

Remote Housing Tune Up Kit Exploded View

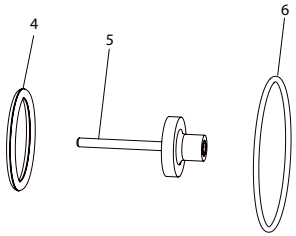

(Dwg. RG_45513520)

Remote Housing Tune Up Kit Parts List

Item	Part Description	Part Description	
	Remote housing Tune Up kit	QA6-1R-K40	QA8-1R-K40
4	O-Ring 15.6 mm		
5	Shut off Valve	131128	131128
6	O-Ring 40 mm		

Assembly Instructions for Remote Housing Module

1. Place Valve Seat (3) in remote Motor Housing's (7) valve seat groove.

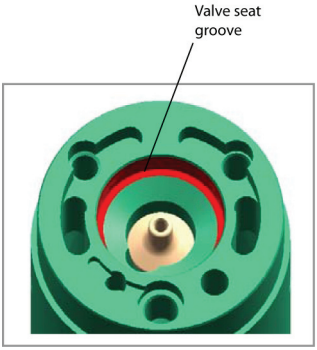

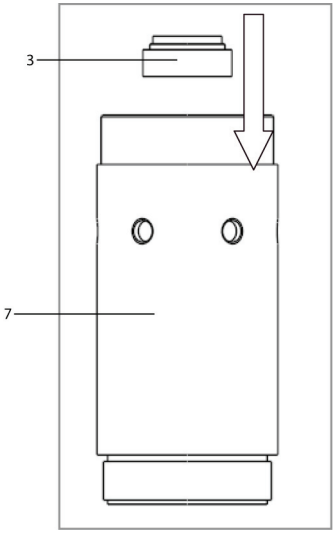

2. Grease O-ring (4) with **Ingersoll Rand** # 68 Grease and Mount on the Valve Seat's (3) O-ring Groove in above Assembly.

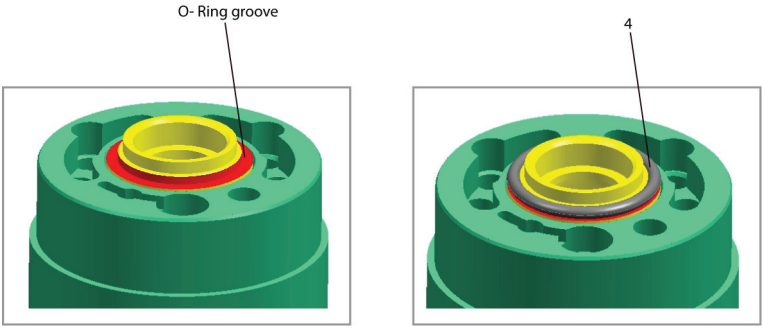

3. Place Shut-off Valve (5) on Valve Seat's (3) Step Diameter. Make Sure That Stem of Shut-off Valve Passes Through The Hole In Valve Guide In Remote Motor Housing.

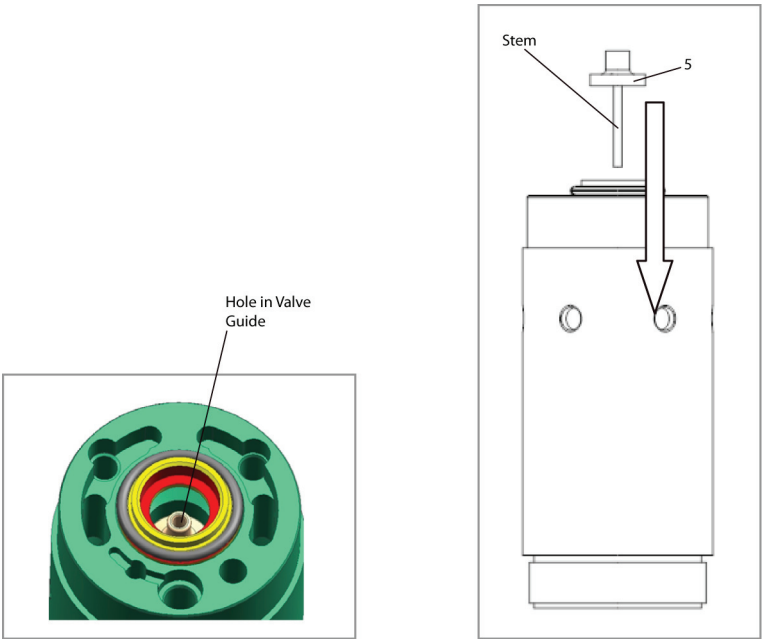

4. Grease O-ring (6) with **Ingersoll Rand** # 68 Grease and Mount in Remote Start Housing (1) Internal Groove.

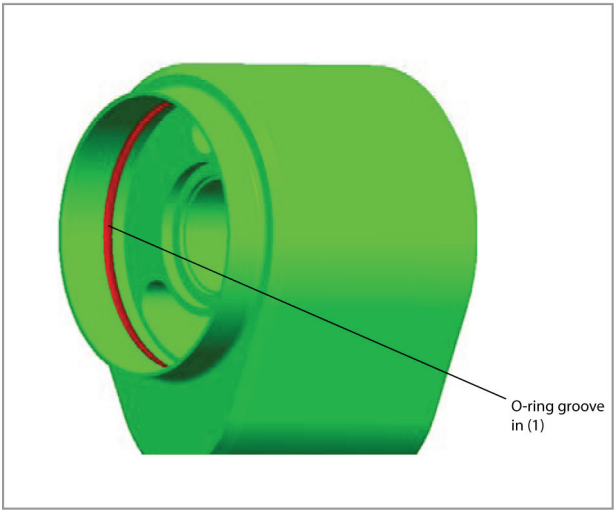

5. Insert Remote Screw (8) in the Remote Screw Hole of Remote Housing. Slide this Assembly onto Remote Motor Housing (7). Tighten this Screw onto Remote Screw's threads in Remote Motor Housing by hand first.

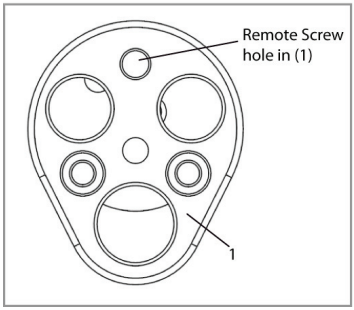

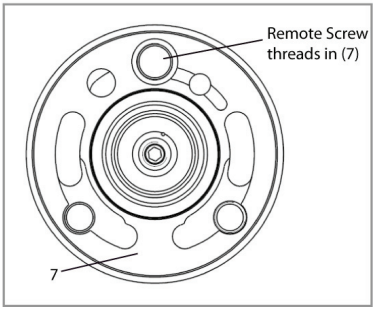

6. Insert Screw (9), Qty 2 in the counter holes in remote start housing of above assembly and tighten screws onto screw's threads in remote motor housing by hand first.

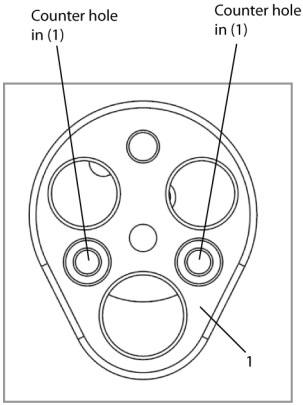

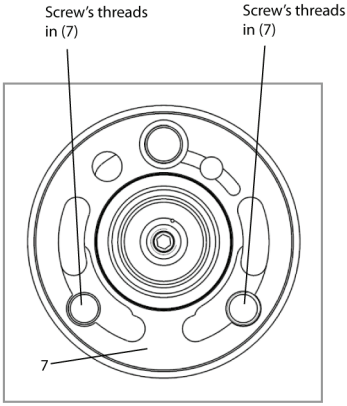

7. Tight screw (8) clockwise to 5 nm (3.7 Ft-lb) and screws (9) clockwise to 6 nm (4.5 Ft-lb) assembled in step 5 and 6 by using a torque wrench.

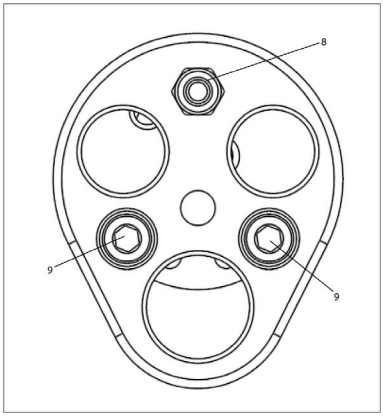

8. Insert Chip Holder Assembly (2) into the chip holder hole in remote start housing (1).

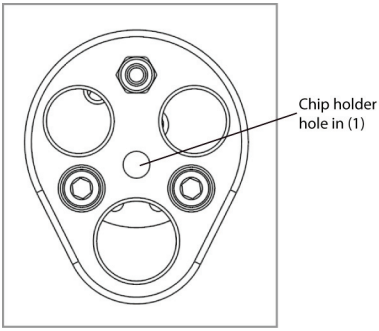

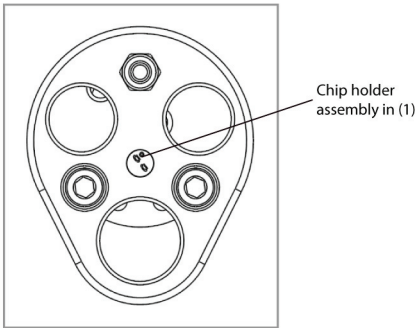

Motor Housing Module Exploded View

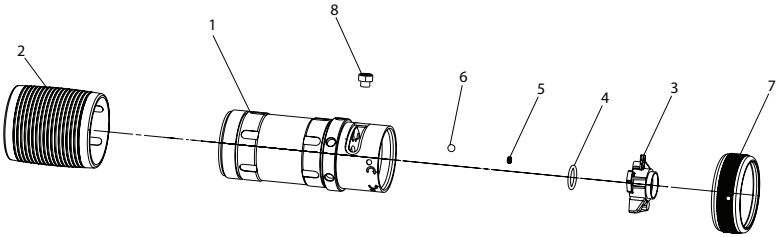

(Dwg. RG_45504602)

Motor Housing Module Parts List

Item	Part Description	Part Number	
	Motor Housing Assembly	**QA6-A40**	**QA8-A40**
1	Motor Housing		
2	Grip	QA6-145	QA6-145
3	Reverse Valve	QA6-329	QA6-329
4	O-Ring 14.8 mm		
5	Spring 3.6 mm		
6	Ball		
7*	Reverse Ring Assembly	QA6-A273	QA6-A273
8	Reverse Screw M8	131069	131069

* See Subassembly Exploded View and Parts List for Detail.

Tooling Required

Standard tools and Products

- O-ring Lube (**Ingersoll Rand** # 68)
- Loctite # 542
- Allen Key 4mm

Subassemblies

Reverse Ring Assembly Exploded View

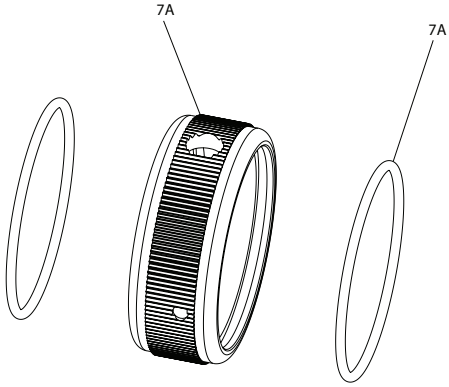

(Dwg. RG_45503844)

Reverse Ring Assembly Parts List

Item	Part Description	Part Number
7	**Reverse Ring Assembly**	**QA6-A273**
7A	Reverse Ring	
7B	O-ring 38 mm	(2)

Assembly Instructions for Reverse Ring Assembly

1. Coat O-ring (7b), Qty#2 with O-ring lube and mount in Reverse Ring (7a) grooves, one each. See section view for the proper placement.

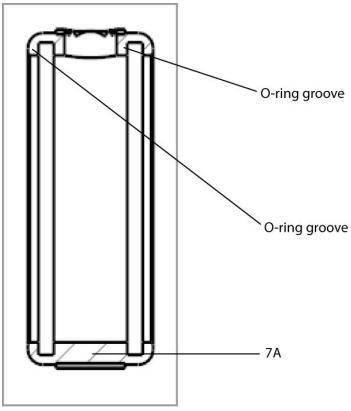

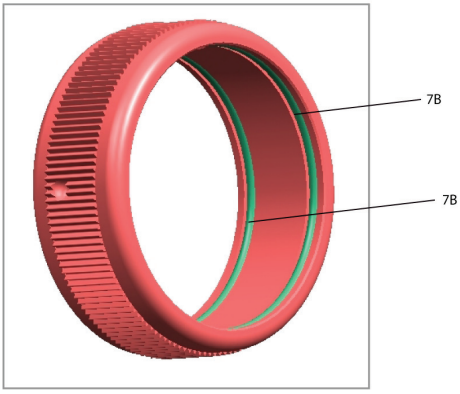

Assembly Instructions for Motor Housing Module

1. Slide Grip (2) on motor housing (1). Make sure to align motor housing pockets with grip pockets.
   Note: Do not use oil or other lubricants, heat slightly to soften the grip if required.

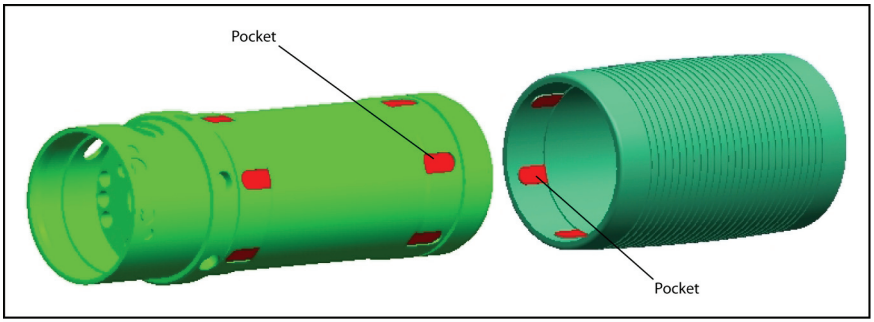

2. Orient Reverse Ring Assembly (7) with indicator hole closer to indicator hole on motor housing (1).

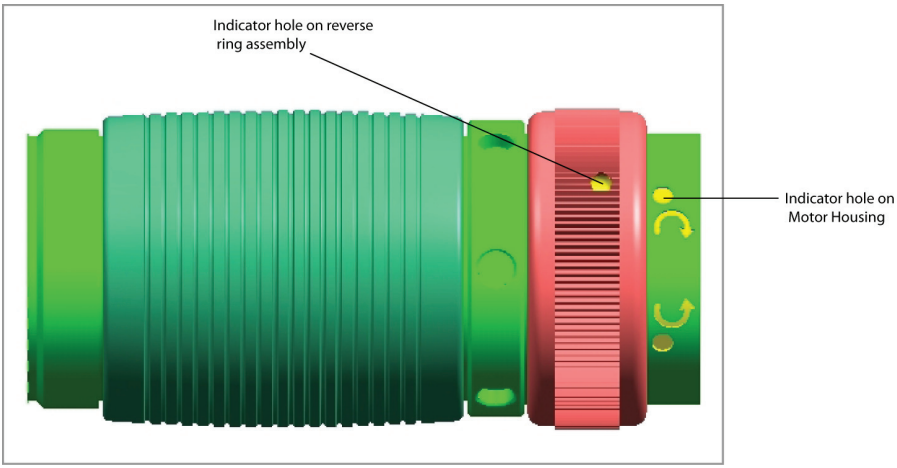

3. Coat Ball (6) with o-ring grease and place onto either ball hole in motor housing.

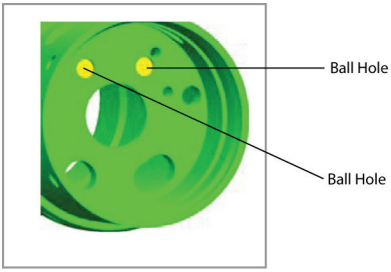

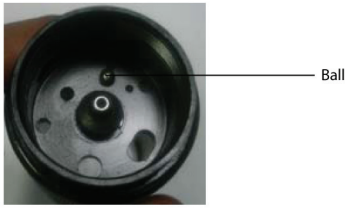

4. Coat Spring (5) with o-ring grease and place onto reverse valve (3) spring hole.

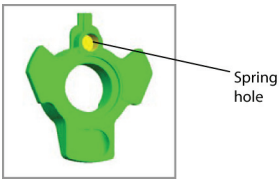

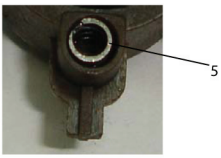

5. Coat O-ring (4) with o-ring lube and place on the groove in reverse valve (3).

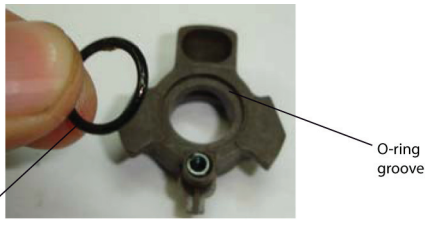

6. Place above reverse valve assembly onto motor housing. Make sure that ball spring in reverse valve sits over ball placed in motor housing. See Step 3 above.

7. Coat Reverse Screw (8) Threads with loctite # 542. Tighten reverse screw fully with allen key on reverse ring assembly placed on motor housing and then back off 1 / 4 turn. Make sure that screw sits over reverse valve edge. Remove the excess loctite.

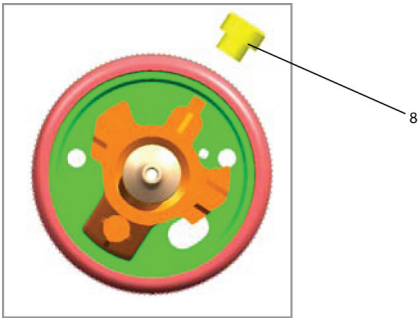

Motor Module Exploded View

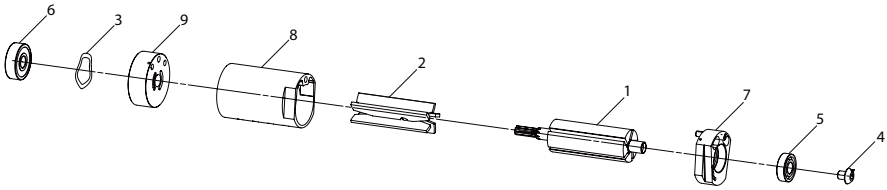

(Dwg. RG_80221583)

Motor Module Parts List

Item	Part Description	Part Number				
	Motor Assembly	**QA6-A53-8**	**QA6-A53-10**	**QA6-A53-11**	**QA8-A53-10**	**QA8-A53-11**
1	Rotor	QA6-53-8	QA6-53-10	QA6-53-11	QA8-53-10	QA8-53-11
2*	Vane Pack	QA6-42-5	QA6-42-5	QA6-42-5	QA8-42-5	QA8-42-5
*	Motor Kit	QA6-1-K53	QA6-1-K53	QA6-1-K53	QA6-1-K53	QA6-1-K53
3	Wave Washer					
4	Adjustment Screw M5					
5	Rear End Bearing 17x7x5					
6	Front End Bearing 22x7x7					
7*	Rear Endplate Assembly	QA6-A12	QA6-A12	QA6-A12	QA6-A12	QA6-A12
8*	Cylinder Assembly	QA6-A3	QA6-A3	QA6-A3	QA8-A3	QA8-A3
9	Front Endplate	QA6-11	QA6-11	QA6-11	QA6-11	QA6-11

* See Subassembly Exploded View & Parts List for Detail.

Tooling Required

Specific Tooling Exploded View

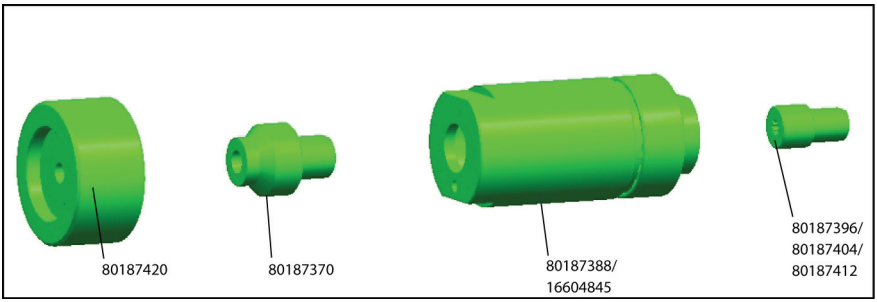

Specific Tooling Parts Lists

Item	Part Description	Part Number	Usage	For Model
1	Rotor Spline Adaptor	80187396	8 Teeth Motor spacing	QA6 { }
2	Rotor Spline Adaptor	80187404	10 Teeth Motor spacing	QA6 { }, QA8 { }
3	Rotor Spline Adaptor	80187412	11 Teeth Motor spacing	QA6 { }, QA8 { }
4	Motor Clamp tool	80187388	Motor spacing	QA6 { }
5	Motor Clamp tool	16604845	Motor spacing	QA8 { }
6	Motor Press Assembly	80187370	Motor Back Bearing Press	QA6 { }, QA8 { }
7	Motor Assembly tool	80187420	Motor Back Bearing Press	QA6 { }, QA8 { }

Standard tools and Products

- Loctite # 243
- Vice
- 3mm Hex Key
- **Ingersoll Rand** # 10 Oil
- **Ingersoll Rand** # 68 Grease
- Heat Gun – for Disassembly
- Soft Mallet
- Manual Arbor Press

Subassemblies

Vane Pack Exploded View

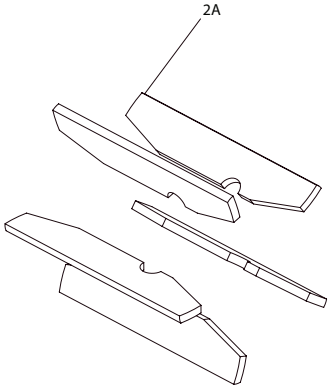

(Dwg. RG_45492162)

Vane Pack Parts List

Item	Part Description	Part Number	
2	**Vane Pack**	**QA6-42-5**	**QA8-42-5**
2A	Vane	(5)	(5)

Motor Kit Exploded View

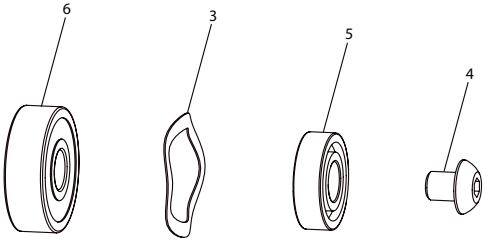

(Dwg. RG_45513546)

Motor Kit Parts List

Item	Part Description	Part Number	
*	**Motor Kit**	**QA6-1-K53**	**QA6-1-K53**
3	Wave Washer		
4	Adjustment Screw M5		
5	Rear End Bearing 17x7x5		
6	Front End Bearing 22x7x7		

Rear Endplate Assembly Exploded View

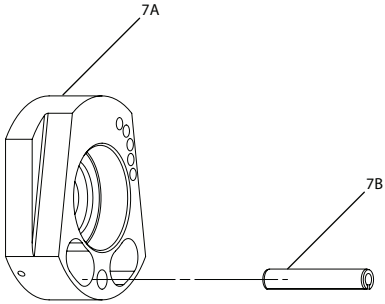

(Dwg. RG_80238579)

Rear Endplate Assembly Parts List

Item	Part Description	Part Number
7	**Rear Endplate Assembly**	**QA6-A12**
7A	Rear Endplate	
7B	Roll Pin 19 mm	Y178-41

Assembly Instructions for Rear Endplate Assembly

1. Insert Roll Pin (7B) in rear endplate (7A) hole and press to maintain pin projection of 2.5Mm. See views below for the proper placement.

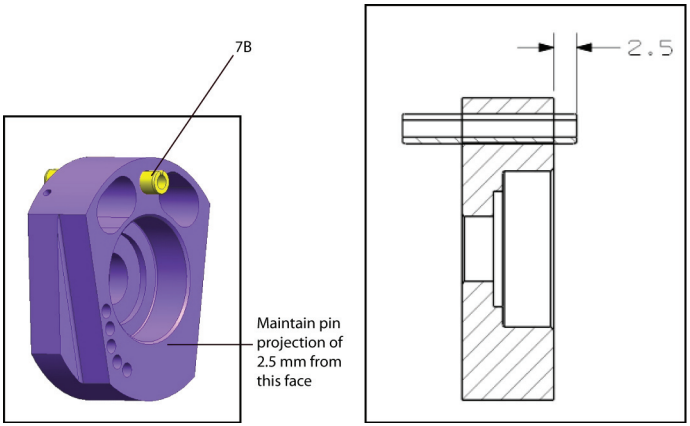

Cylinder Assembly Exploded View

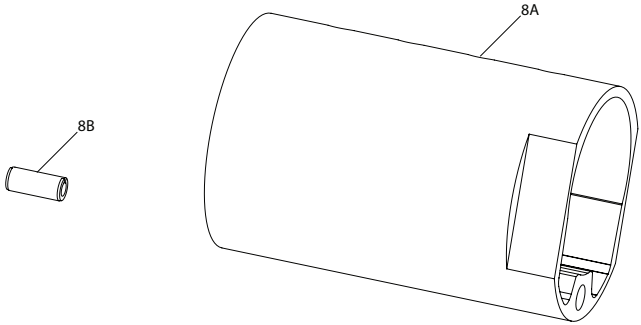

(Dwg. RG_45492139)

Cylinder Assembly Parts List

Item	Part Description	Part Number	
8	**Cylinder Assembly**	**QA6-A3**	**QA8-A3**
8A	Cylinder		
8B	Roll Pin	Y178-191	Y178-191

Assembly Instructions for Cylinder Assembly

1. Insert Roll Pin (8B) into Cylinder (8A) Pin Hole and Press Pin on Manual Press to Maintain Pin Projection of 2.5mm. See views below for the proper placement.

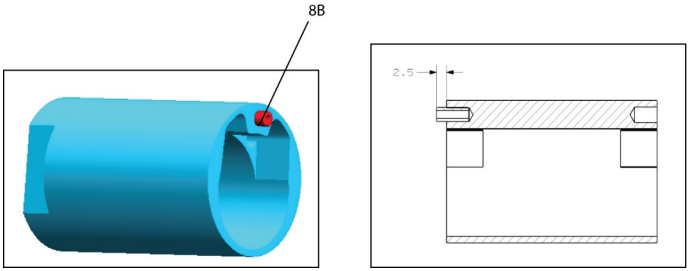

Replacement of Vanes

1. Hold Motor firmly in hand, strike mallet on rotor spline to drive rotor (1) and rear endplate assembly out of front endplate (9). Remove front endplate (with wave washer and bearing) and cylinder assembly from motor module.

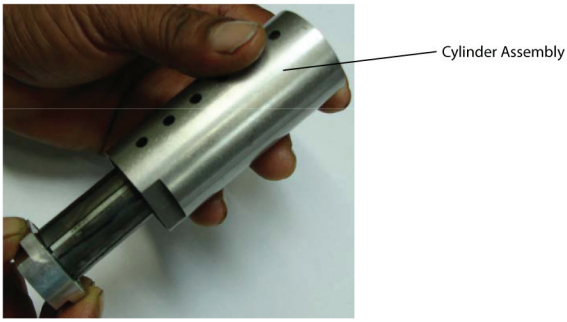

2. Remove Vanes (2A) qty # 5 from rotor and using degreaser clean all surfaces of rotor and endplates. Make sure not to get degreaser in bearing or it may be damaged.
3. Oil all surfaces of new vanes (qty # 5) with **ingersoll rand** # 10 oil. Place them one at a time in rotor (1) slots. Make sure to match vane profile radius with rotor profile radius. See view below.
   Note: Motor will run without lubrication but oil is used for maximum vane life.

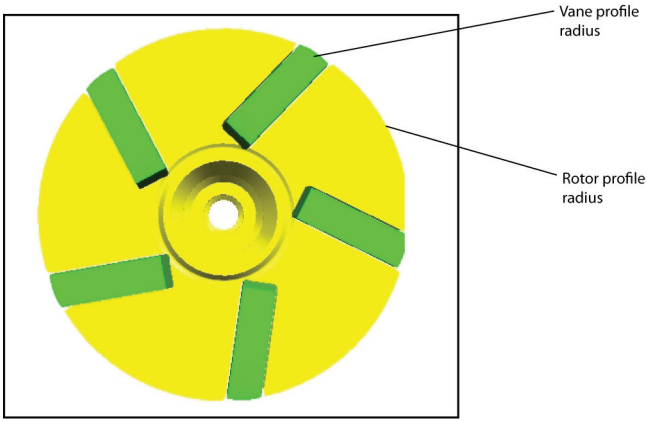

4. Mount Cylinder Assembly in above assembly. Align pin in rear endplate with pin hole in cylinder assembly.
   Note: Hold assembly in straight upward direction otherwise vanes will walk out.

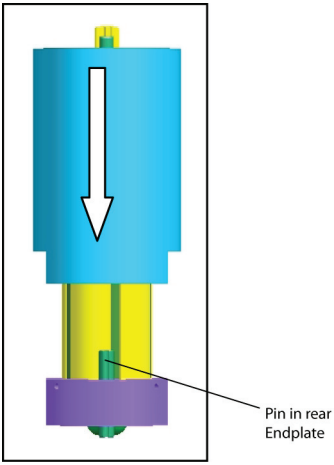

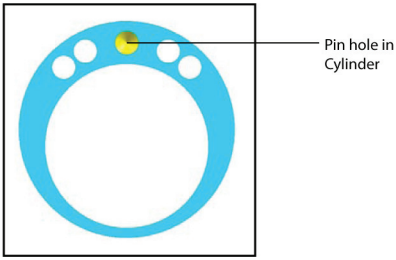

5. Place Front Endplate (with Wave Washer and Bearing) assembly onto rotor shaft. Align roll pin (8b) in cylinder assembly with pin hole in front endplate.

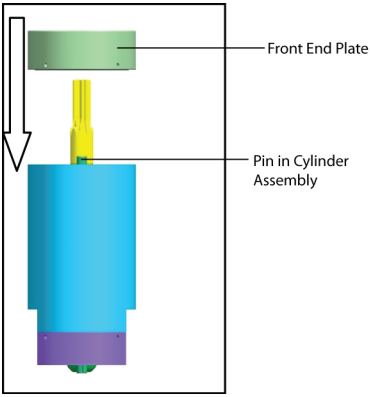

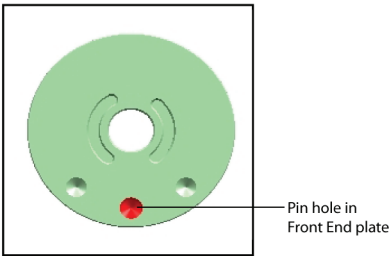

6. Place Fixture 80187420 on top of motor, then press until bearing (6) is properly spaced.

Notes:

1. Make sure to clear adjustment screw (4) and roll pin (7b) in rear endplate assembly from pressing.
2. Bearing should be pressed at least 0.025mm below the surface of the end plate, and not exceeding 0.2mm. The front bearing press fixture 80187420 provides this spacing.

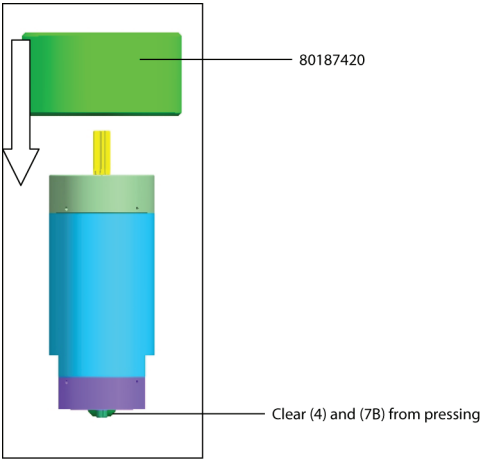

Disassembly of Motor Module

1. Heat Adjustment Screw (4) screwed in the rear of motor with heat gun.
   Note: Adjustment Screw has loctite. Heat is used to break that bonding.

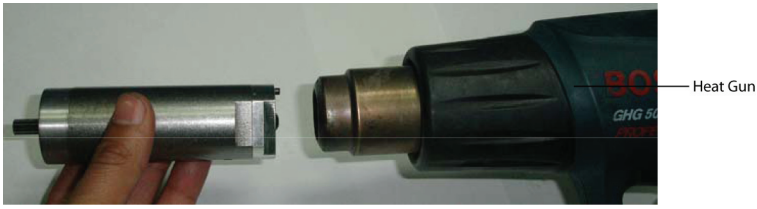

2. Hold Spline Adaptor in vice. Insert rotor splines into adaptor's (80187396 / 80187404 / 80187412 depending on rotor teeth) spline.

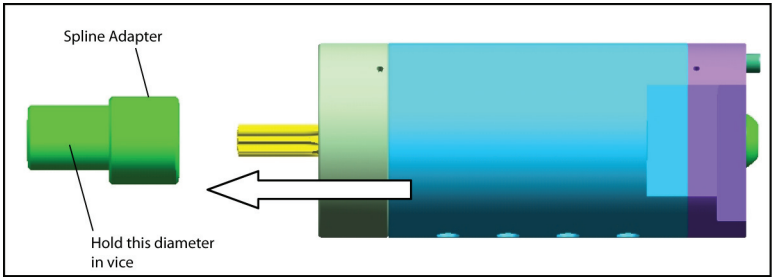

3. Using 3mm Hex key, unscrew adjusting screw.

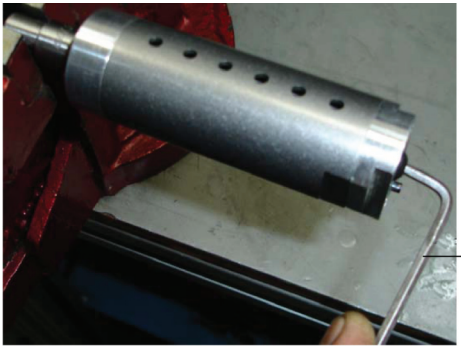

4. Hold Motor firmly in hand, strike mallet on rotor spline to drive rotor (1) and rear endplate assembly out of front endplate (9). Remove front endplate (with wave washer and bearing) and cylinder assembly from motor module.

5. Remove Vanes (2A) Qty # 5 from rotor and using degreaser clean all surfaces of rotor and endplate.
6. Remove rear endplate assembly (7) from rotor.
   Note: It is not a hard press, so gently press out rotor with a pin<7mm from endplate.

Assembly Instructions for Motor Module

Note: Replacement of motor parts may change shut off operation of tool. We recommend ordering new pushrod (132017).

1. Completely clean rotor and cylinder with a degreaser agent, it may be necessary to use a light brush to clean rotor and pin with degreaser.
2. Place Wave washer (3) in front end plate (9) counter bore.

3. Place Bearing (6) over wave washer in front endplate counter bore.

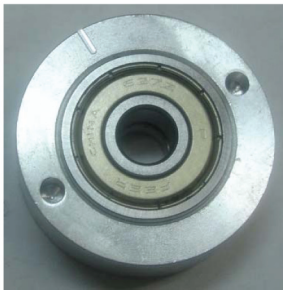

4. Place above assembly in the counter bore of fixture 80187420. Kidney slot side of front endplate must be upward.

   Note: Fixture provides proper placement of front endplate and bearing. Bearing must be pressed a minimum of 0.025mm below front endplate surface after final motor spacing adjustment. Heat build up and bearing failure may occur if not properly spaced.

5. Place Rotor onto front endplate bore. Hold fixture 80187370 in manual press and press rotor in front endplate.

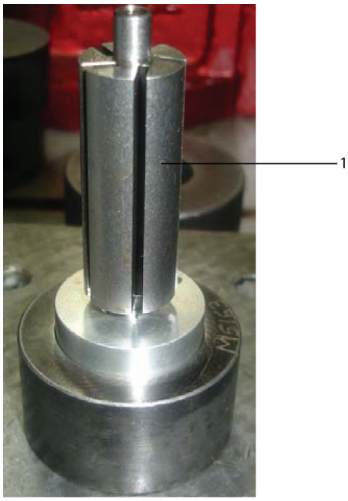

6. Oil all surfaces of new vanes (Qty # 5) with **Ingersoll Rand** # 10 oil. Place them one at a time in rotor (1). Make sure to match vane profile radius with profile radius of rotor.
   Note: Motor will run without lubrication but oil is used for maximum vane life.

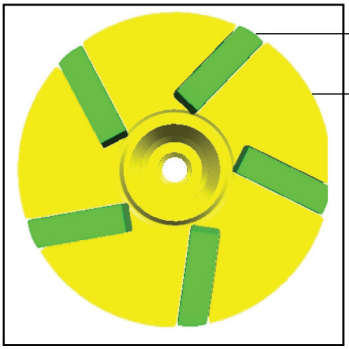

7. Slide Cylinder Assembly (8) over rotor and front endplate. Align roll pin (8b) in cylinder assembly with front endplate pin hole.
   Note: Hold Assembly in straight upward direction otherwise vanes will walk out.

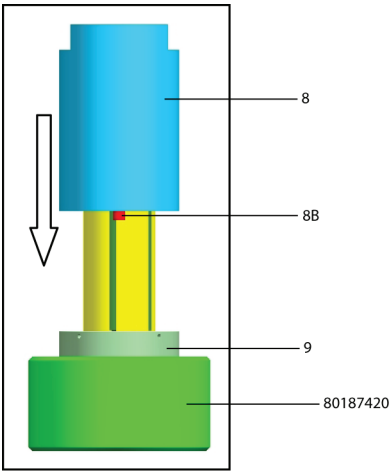

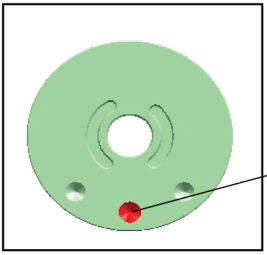

8. Put Rear Endplate Assembly onto rotor shaft. Align roll pin (7B) in rear endplate assembly with cylinder pin hole.
   Note: Counter Bore side of rear endplate assembly must be upward.

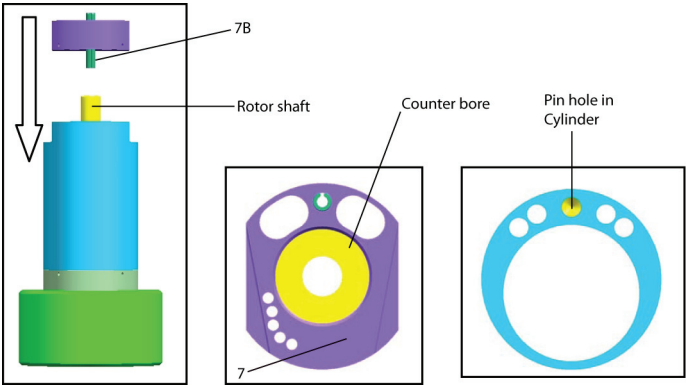

9. Grease Bearing (5) with **Ingersoll Rand** # 68 Grease and place onto Rotor Shaft and Rear Endplate Assembly counter Bore. Press Bearing Using Fixture 80187370 Until Assembly is tight and will not rotate.
   Note: Rear Endplate press fixture 80187370 presses the bearing inner race. Pressing outer race may damage bearing.

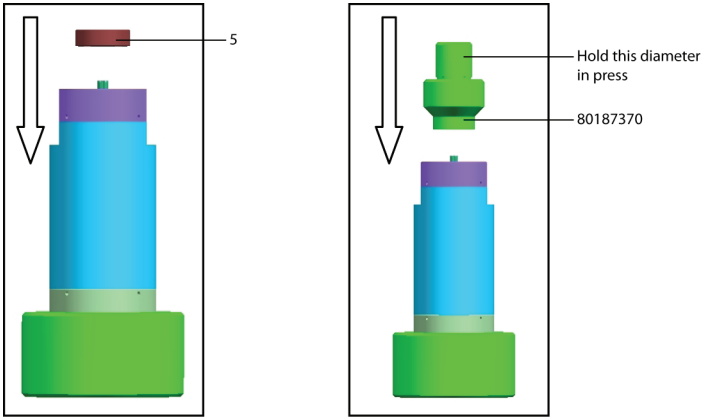

Adjustment of Motor Module

1. Place Motor in motor clamp tool fixture 80187388 / 16604845 (Depending on QA6 or QA8). Align Motor Assembly so that the pin (7B) in rear endplate assembly locates into pin hole at the bottom of fixture.

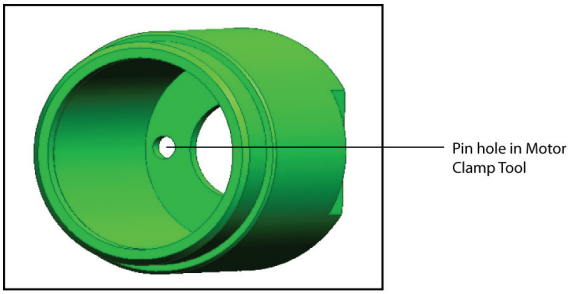

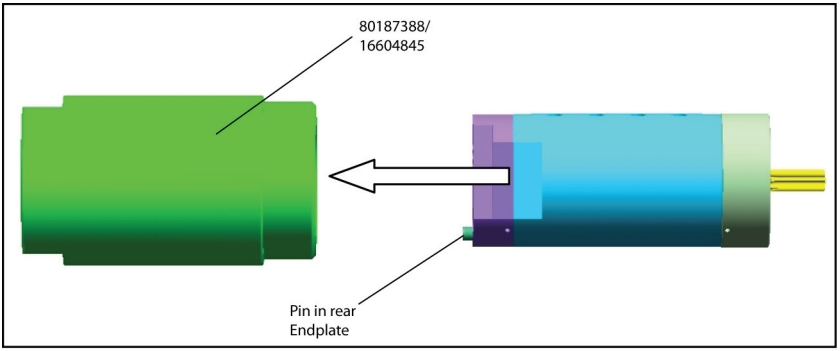

2. Thread Back Cap onto fixture. Tighten it to 40 nm (30 ft-lb) using a wrench.
   Note: Motor clamp tool fixture simulates motor in actual tool assembly. Unclamped motors may not be properly spaced and cause motor to overheat or bind.

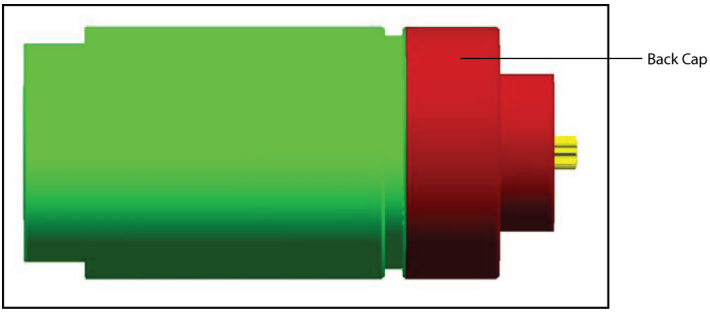

3. Hold Spline adaptor in vice. Insert rotor splines of above assembly into spline adaptor (80187396 / 80187404 / 80187412 depending on rotor teeth) splines.

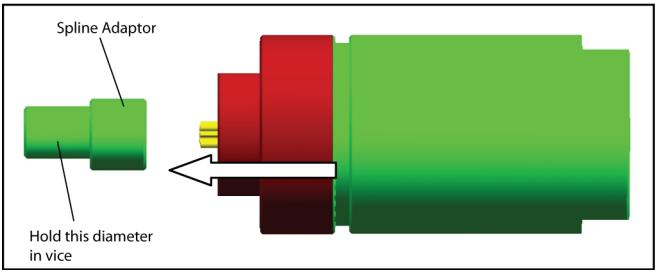

4. Clean Adjustment screw (4) and screw hole in back of rotor with degreaser. Coat initial few threads of adjustment screw with Loctite # 243. Partially thread adjustment screw into the screw hole of rotor using 3mm hex key.

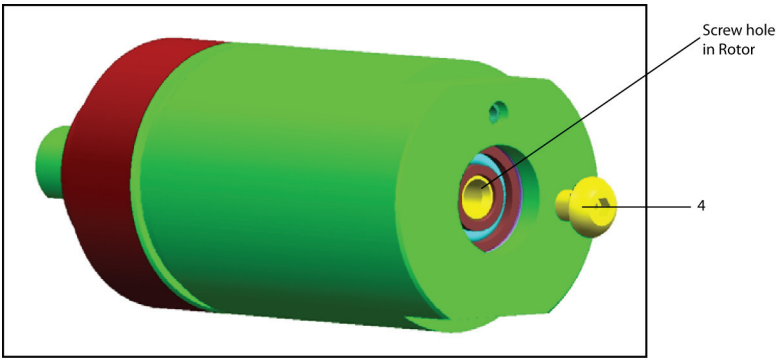

5. Slowly tighten Adjustment Screw. Tighten it until Assembly rotates freely.

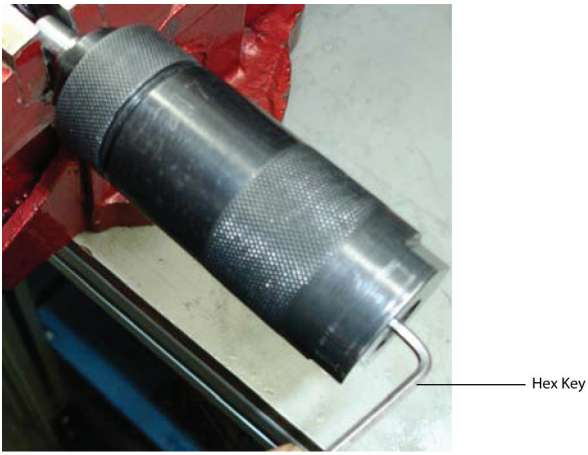

Remove Motor module from Motor Clamp Fixture 80187388 / 16604845.

Note: When spacing is correct and motor is rotating freely, motor and fixture 80187388 / 16604845 should fall to vertical orientation of pin and center screw, if motor does not come free and screw can not be tightened further, motor must be completely disassembled.

Note: After Motor is clamped in 80187388 / 16604845 tooling, the rotor may already spin freely. If this occurs, follow the same assembly procedure procedure, after the screw (bottom out against back bearing), continue tightening about 10 degrees. Rotor should still spin freely. This is to ensure proper rotor spacing during normal tool operation.

First Stage Module Exploded View

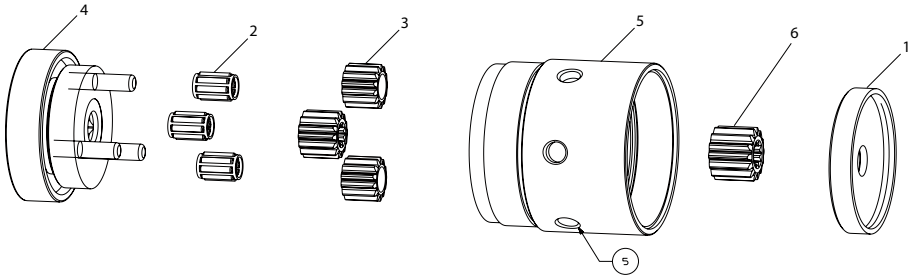

(Dwg. RG_53449310)

First Stage Module Parts List

Item	Part Description	Part Number			
	1st Stage Gear Assembly	**132023**	**132022**	**132020**	**132021**
1	Front Cap	132004	132004	132004	132004
2*	Needle Roller Bearing Kit	QA6-1-K24	QA6-1-K24	QA6-1-K24	QA6-1-K24
3*	Planet Gear Kit	QA6-K10-29	QA6-K10-25	QA8-K10-29	QA8-K10-13
4	Spindle Assembly	QA6-A8-9P50	QA6-A8-6P54	QA6-A8-7P80	QA8-A8-3P86
4A+	Bearing 37x20x9	119277	119277	119277	119277
4B+	Circlip	126293	126293	126293	126293
5	Gear Case	132011	132013	132011	132011
6	Pinion	-	-	-	QA6-17-14

+ Not Illustrated.
* See Subassembly Exploded View and Parts List for Detail.

Tooling Required

Standard tools and Products

- **Ingersoll Rand** # 90 Grease
- External Circlip Pliers

Subassemblies

Needle Roller Bearing Kit Exploded View

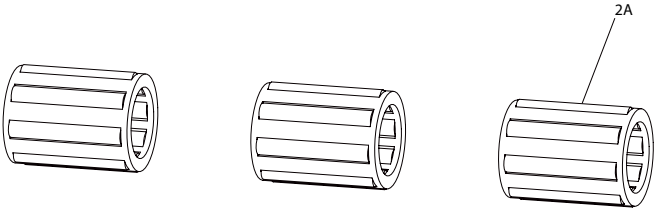

(Dwg.RG_45513702)

Needle Roller Bearing Kit Parts List

Item	Part Description	Part Number
2	**Needle Roller Bearing Kit**	**QA6-1-K24**
2A	Needle Roller Bearing	(3)

Planet Gear Kit

Note: If Planet teeth are broken, it is recommended to buy this kit for maximum tool life.

Planet Gear Kit Exploded View

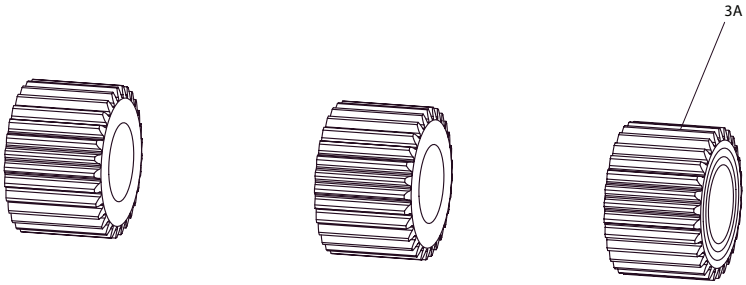

(Dwg.RG_45513827)

Planet Gear Kit Parts List

Item	Part Description	Part Number			
3	**Planet Gear Kit**	**QA6-K10-29**	**QA6-K10-25**	**QA8-K10-29**	**QA8-K10-13**
3A	Planet Gear	(3)	(3)	(3)	(3)

Assembly Instructions for Spindle Assembly

1. Press Bearing (4A) on Carrier Shaft of Spindle Assembly (4).

Notes:

a. Support inner race of bearing during pressing.
b. Unshielded Side of Bearing must face Spindle Assembly (4).
c. The Gear Pins assembled with carrier of spindle assembly (4) must not press further during pressing the bearing. Otherwise, check pin projection of 10.225/10.075Mm from carrier face as shown in view below.

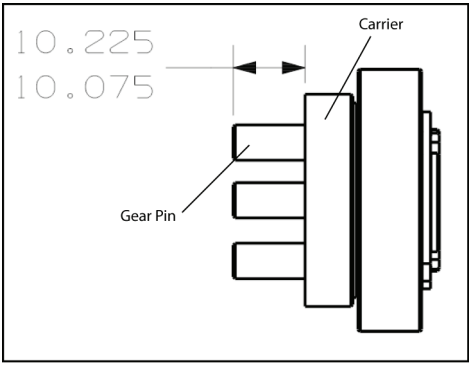

2. Use an External Circlip pliers to place circlip (4b) on the groove of carrier of above assembly.

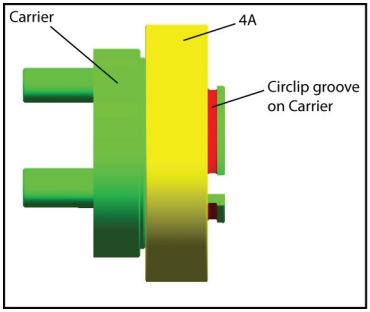

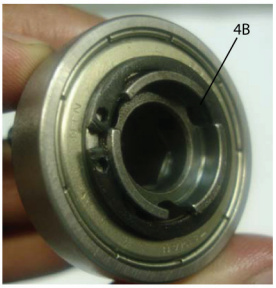

Assembly Instructions for First Stage

1. Grease Needle Roller Bearings (2a) with **Ingersoll Rand** #90 Grease. Place Needle Roller Bearing, Qty#3 onto Gear Pins of Carrier.

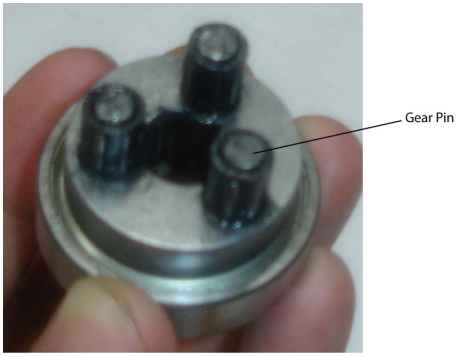

2. Place Planet Gear, Qty # 3 onto Needle Roller Bearings of above Assembly.

3. Grease Gear Case's splines with **ingersoll rand** # 90 grease. Place above assembly in gear case (5).Ensure planet gear's teeth engage with gear case's teeth and face of bearing in spindle assembly must sits against the placement face of gear case. See section view below for the proper placement.
   Note: Hold Assembly in straight upward direction otherwise planet gears and needle roller pins will walk out.

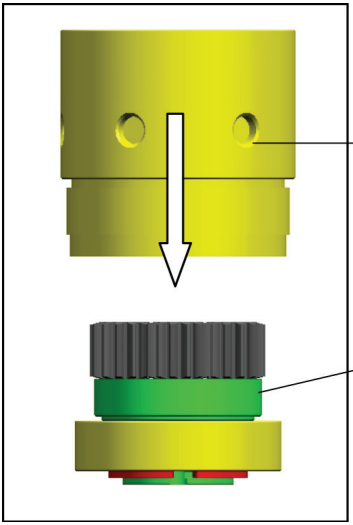

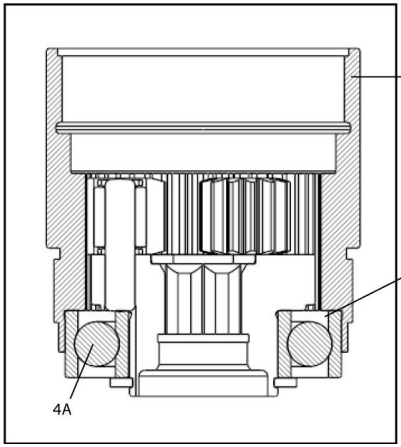

4. Grease Spindle Assembly's (4) Gears with **Ingersoll Rand** # 90 Grease.
5. **Note**: (This is an additional Step for 132010 Assembly only)
   Mount Pinion (6) in Planet Gears set in the above Assembly.

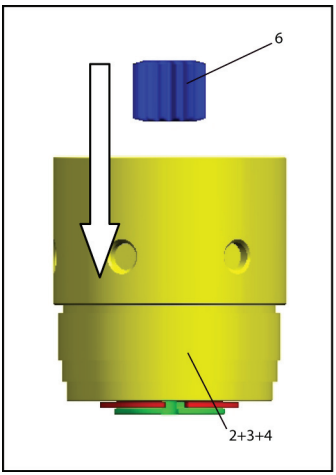

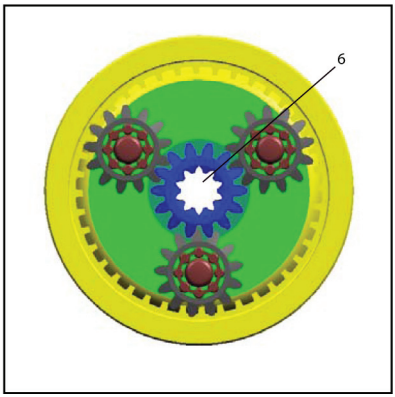

6. Place Front Cap (1) inside the gear case of above assembly. Back face of bearing cap (1) must sits against the placement face of gear case. See section view below the proper placement.

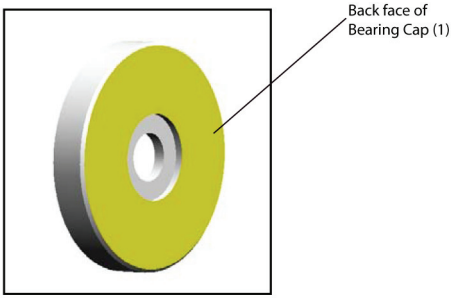

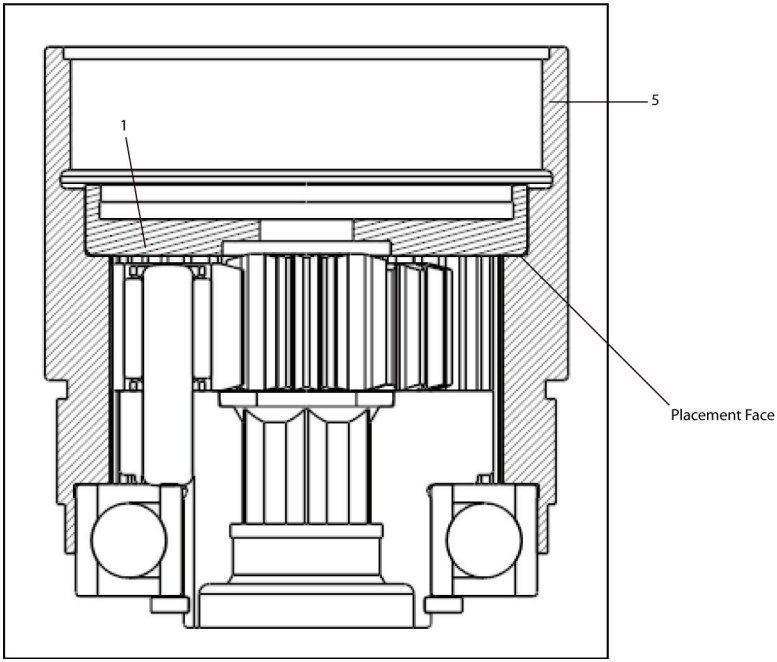

Clutch and Direct Drive Assembly Exploded View

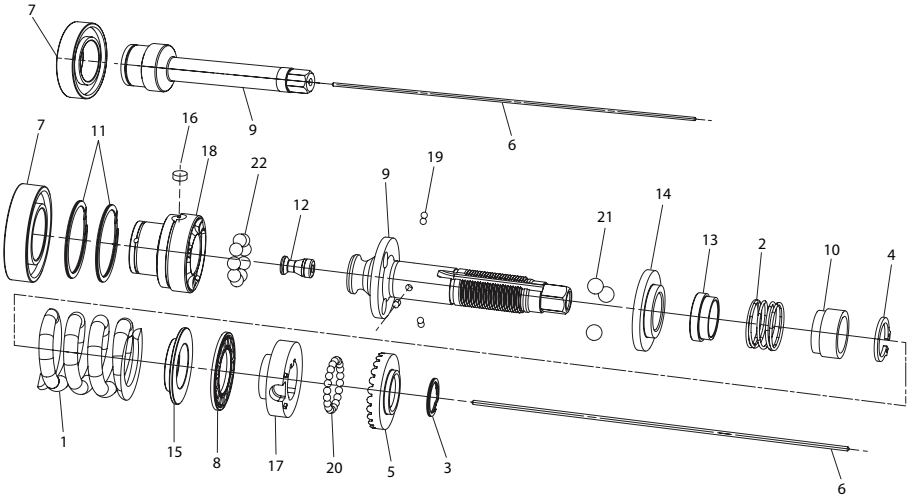

(Dwg. 80227549)

Clutch and Direct Drive Assembly Parts List

Item	Part Description	Part Number				
	Clutch Assembly	**QA8H-A579**	**QA8L-A579**	**QA6H-A579**	**132015**	**QA6D-A579**
1	Clutch Spring	QA8-H-583	QA8-L-583	QA6-H-583	QA6-L-583	
2	Collar Spring	132066	132066	132066	132066	
3	Retaining ring	182A13-CXRSN50	182A13-CXRSN50	182A13-CXRSN50	182A13-CXRSN50	
4	Retaining ring	Y142-20	Y142-20	Y142-20	Y142-20	
5	Adjustment Nut	132074	132074	132074	132074	
6	Push Rod	132017	132017	132017	132017	132017
7	Bearing	119277	119277	119277	119277	119277
8	Bearing	132059	132059	132059	132059	
9	Driver Shaft	132056	132056	132056	132056	QA6-590
10	Spring Guide	132063	132063	132063	132063	
11	Circlip	181A13-CXRS106 (2)	181A13-CXRS106 (2)	181A13-CXRS106 (2)	181A13-CXRS106 (2)	
12	Plunger	132061	132061	132061	132061	
13	Shutoff Collar	132062	132062	132062	132062	
14	Lower Jaw	132057	132057	132057	132057	
15	Spring Guide	132060	132060	132060	132060	
16	Plug	126297	126297	126297	126297	
17	Nut Lock Washer	132058	132058	132058	132058	
18	Upper Driven Jaw	132055	132055	132055	132055	
*	Ball Kit	QA6-1-K581	QA6-1-K581	QA6-1-K581	QA6-1-K581	
19	Plunger Ball 2.38 mm	(6)	(6)	(6)	(6)	
20	Ball 2.78 mm	(21)	(21)	(21)	(21)	
21	Clutch Ball 6 mm	(3)	(3)	(3)	(3)	
22	Ball 5 mm	(9)	(9)	(9)	(9)	

* See Subassembly Exploded View & Parts List for Detail.

Tooling Required

Specific Tooling

Retaining Ring tool (80187362): This tooling is required for assembly of retaining ring (4). Pliers will not work.

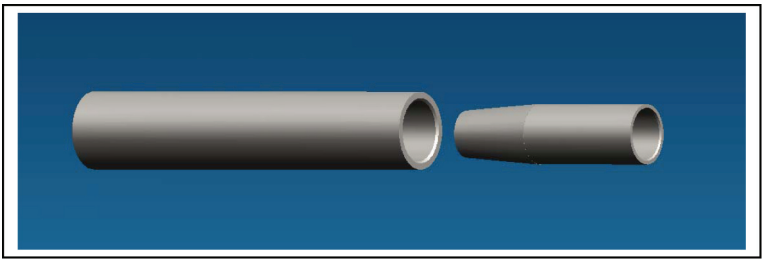

Standard tools and Products

- Manual Press
- tool Pick
- **Ingersoll Rand** # 68 Grease
- **Ingersoll Rand** # 40036-1 Clutch Grease
- torx Driver for Clutch Adjustment (125116)

Subassemblies

Ball Kit Exploded View

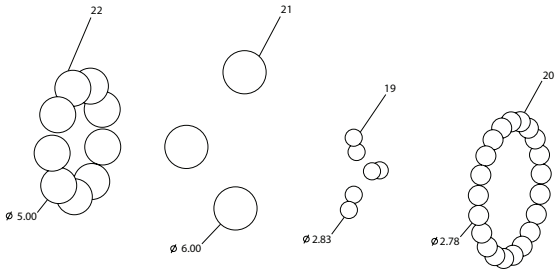

(Dwg. RG_45513850)

Ball Kit Parts List

Item	Part Description	Part Number			
*	Ball Kit	QA6-1-K581	QA6-1-K581	QA6-1-K581	QA6-1-K581
19	Plunger Ball 2.38 mm	(6)	(6)	(6)	(6)
20	Ball 2.78 mm	(21)	(21)	(21)	(21)
21	Clutch Ball 6 mm	(3)	(3)	(3)	(3)
22	Ball 5 mm	(9)	(9)	(9)	(9)

Disassembly Instructions for Clutch Module

1. Slip Retaining Ring (3) off of Driver Shaft (9) with Pick to Unlock Adjustment Nut (5). See Detail view below.

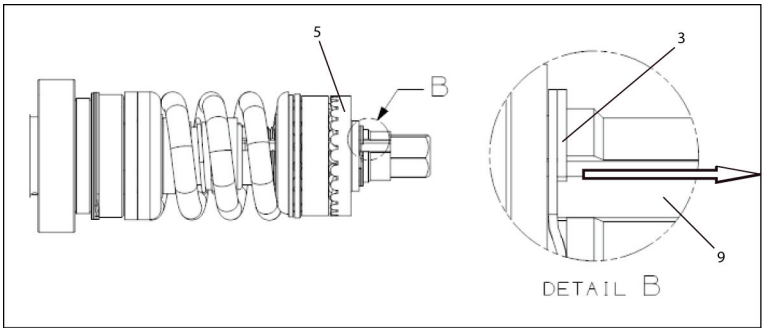

2. Insert The Bit of torx Driver (125116) in the teeth of Adjustment Nut and Nut Lock Washer's (17) Slot. Rotate torx Driver in Clockwise Direction to loose Adjustment Nut.

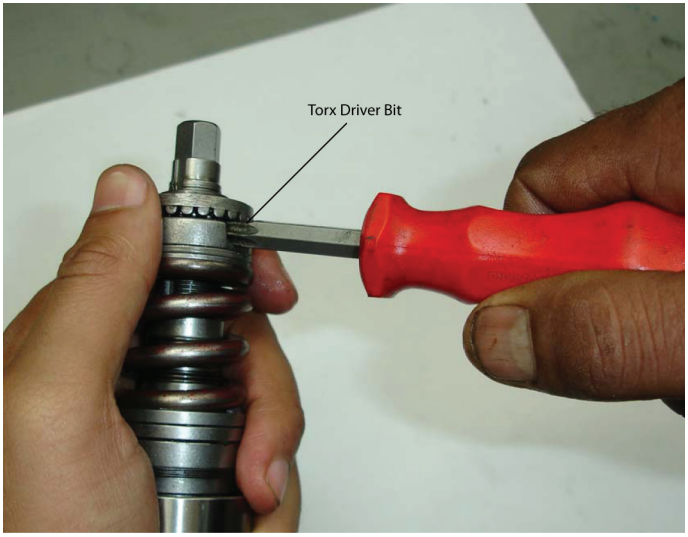

3. Rotate Adjustment Nut in counter clockwise direction to remove.
   Note: 1. Hold clutch module in upward direction as shown in view below, otherwise the balls (20) in adjustment nut ball groove will walk out.

4. Remove Nut Lock Washer (17), Bearing (8), Spring Guide (15) and Clutch Spring (1).

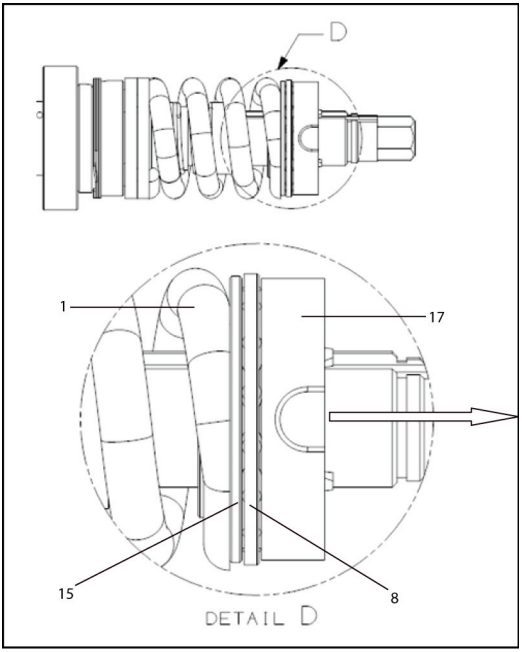

5. Remove Retaining Ring (4) from Driver Shaft's Retaining Ring Groove by using a pick.
   Note: Retaining Ring deforms permanently after removal, destroy it and use a new one.

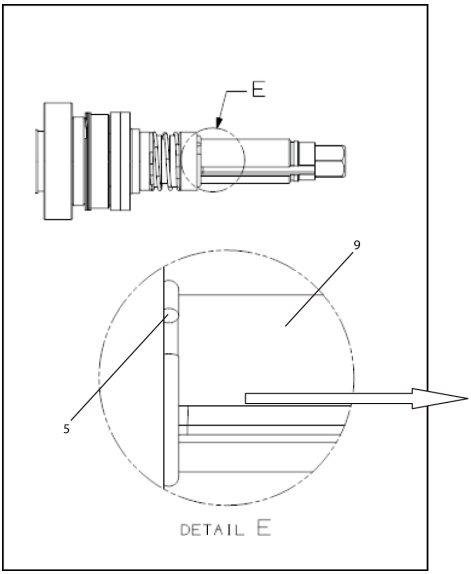

6. Remove Spring Guide (10), Collar Spring (2), Shut-off Collar (13) and Lower Jaw (14).

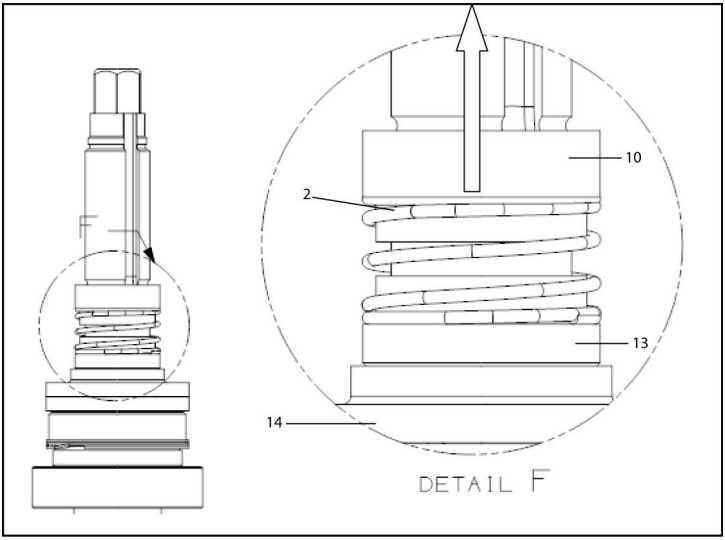

7. Remove 3 X Clutch Balls 6mm (21) from upper driven jaw's cam profile.

   Note: Check that there are 3 balls and keep them for re-assembly unless heavily worn.

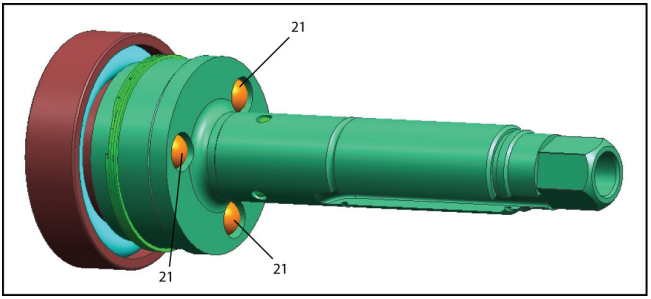

8. Remove 6 X Ball 2.78mm (19) from clutch shaft's plunger holes.
   Note: Check that there are 6 balls and keep them for re-assembly unless heavily worn.

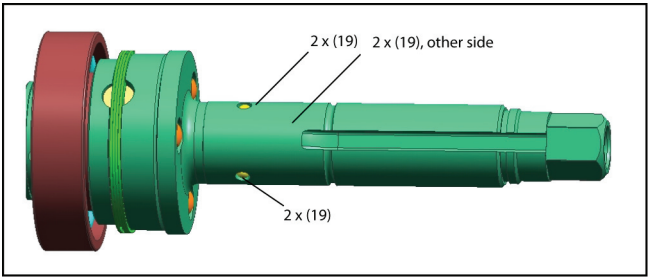

9. Remove Retaining Ring (Qa8-701) from upper driven jaw's (18) retaining ring groove.

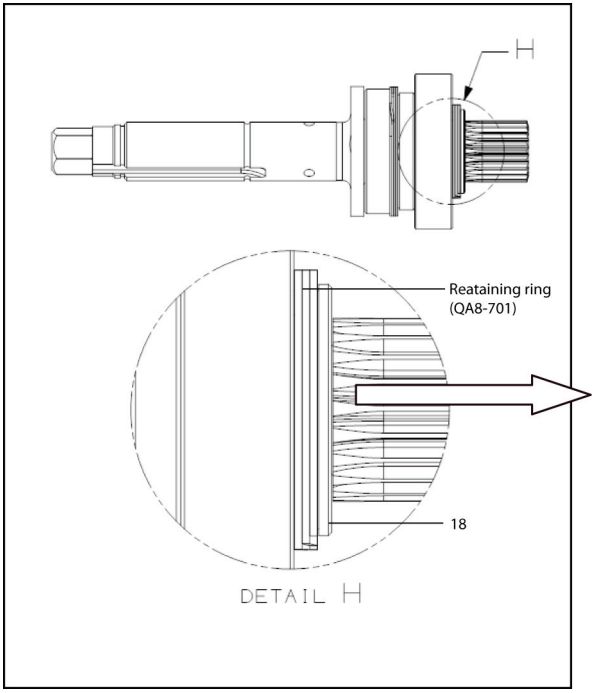

10. Take off Pin (Qa6-15) from upper driven Jaw's Pin Hole by Inserting A Pin of Diameter Less Than 1.3mm through Pin hole.

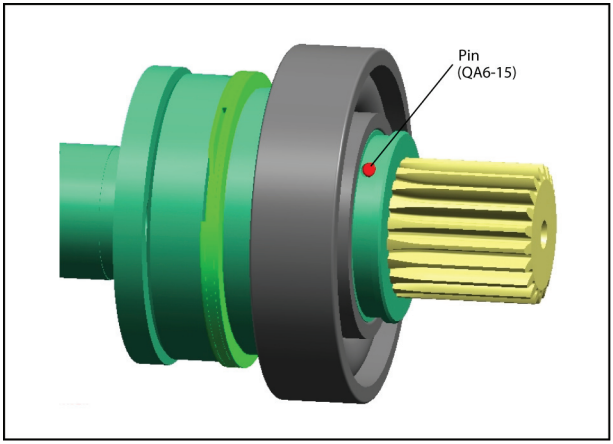

11. Remove Sun from Upper Driven Jaw (18) by Hand.

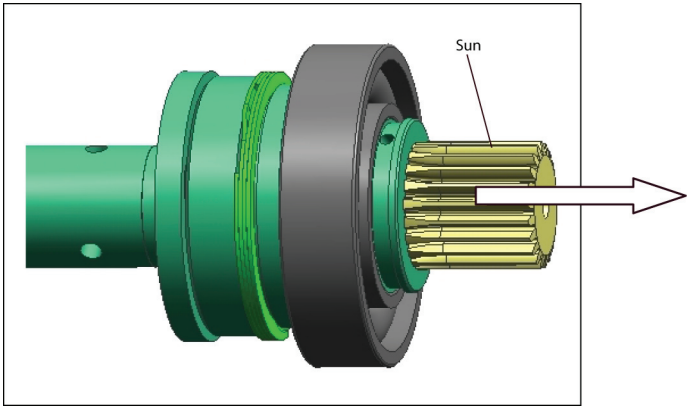

12. Remove Bearing (7) from Upper Driven Jaw (18) Using Manual Press.
    Note: Removal Process Can Damage Bearing. It Is Recommended to use a New Bearing for Assembly.
13. Remove Circlip (11), Qty # 2 from Upper Driven Jaw (18) Using Pick.

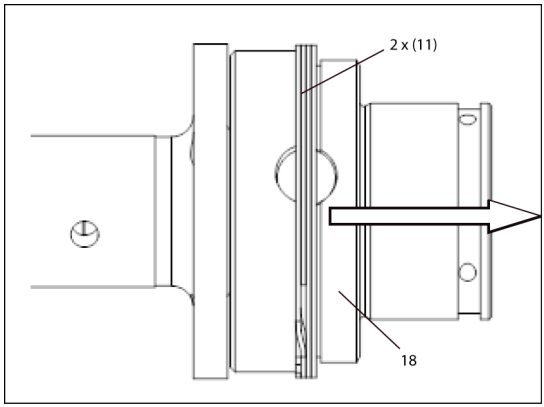

14. Remove Plug from driven jaw by tapping upper driven jaw gently against the work surface.

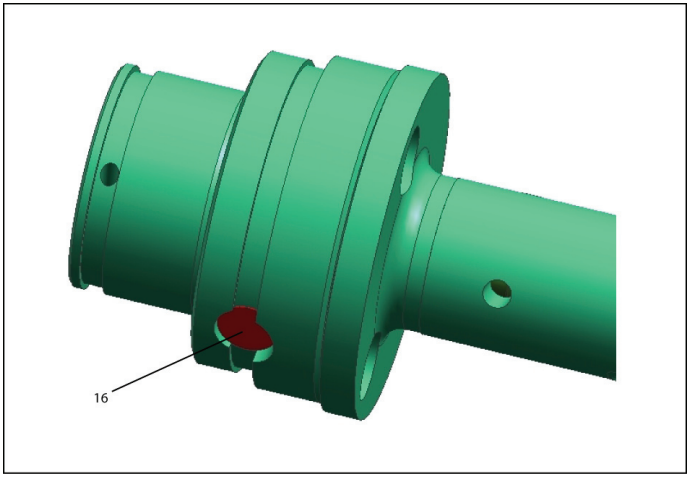

15. Remove 9 X Balls 5mm (22) by rotating and tapping upper driven jaw gently against the work surface.

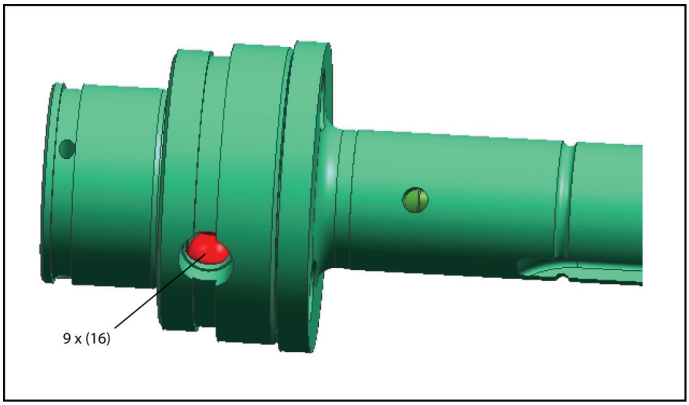

16. once all balls are removed, separate Driver Shaft (9) from Upper Driven Jaw (18).
Note: Check that there are 9 Balls and Keep them for Re-assembly.

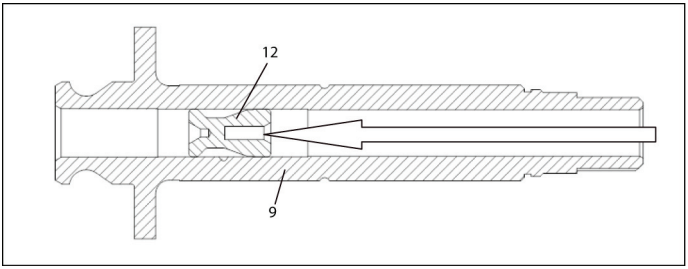

Assembly Instructions for Clutch Module

1. Fill Internal Ball Groove and Cam Pockets of Upper Driven Jaw (18) with **Ingersoll Rand** # 40036-1 Grease.

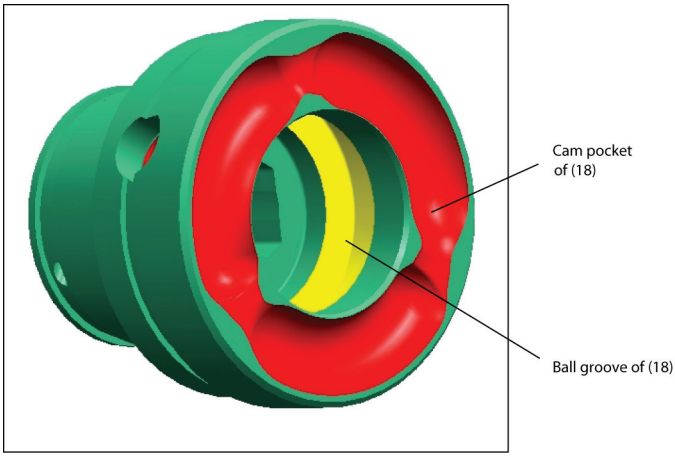

2. Fill Ball Groove and Plunger Hole of Driver Shaft (9) with **Ingersoll Rand** # 40036-1 Grease.

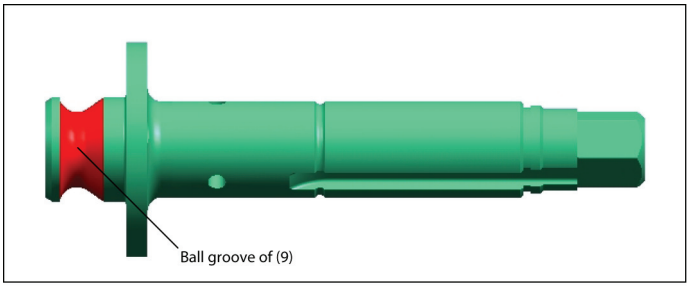

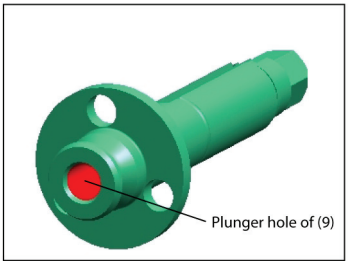

3. Insert Upper Driven Jaw (18) onto Driver Shaft (9).

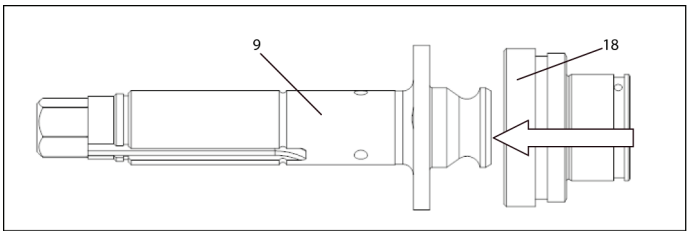

4. Grease 9 X Ball (22) with **Ingersoll Rand** # 40036-1 Grease. Insert them one by one in the Ball Groove of Driver Shaft (9) and upper driven jaw (18) through plug hole of upper driven jaw.

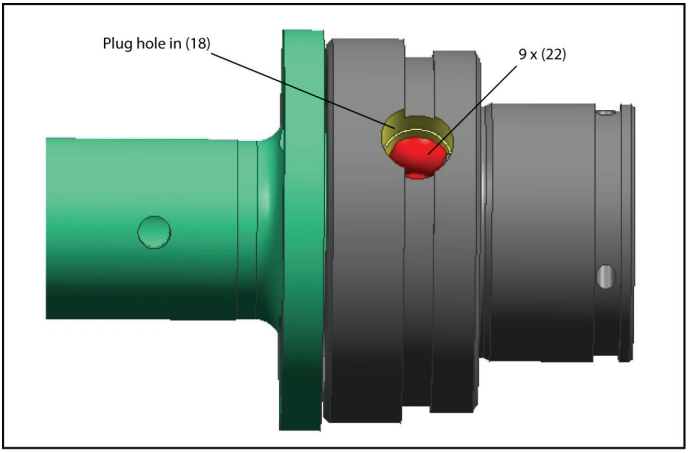

5. Place Plug (16) in plug hole of upper driven jaw (18). The smaller diameter of plug must face ball (22) inserted in step (3)
Note: Plug must sit below the retaining ring surface of upper driven jaw.

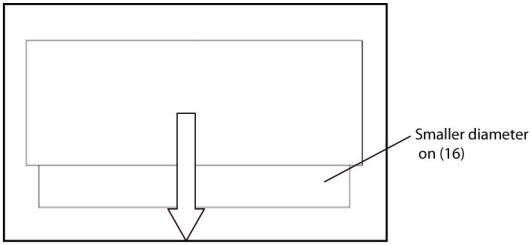

6. Place 2 X Circlip (11) onto upper driven jaw's (18) plug retaining ring groove.

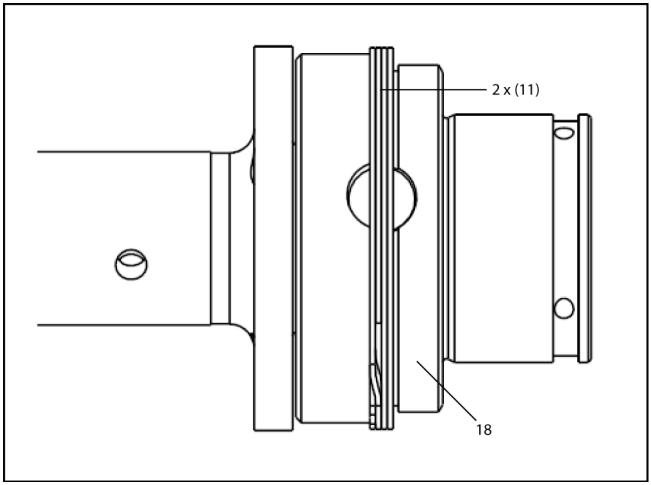

7. Grease Ball Pocket of Driver Shaft (9) with **Ingersoll Rand** 40036-1 Grease.
8. Insert 3 X Clutch Ball 6mm (21) In Upper Driven Jaw'S (18) Cam Pocket Through Driver Shaft's (9) Ball Hole.

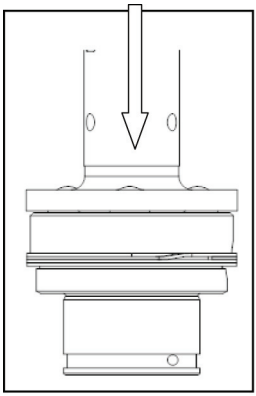

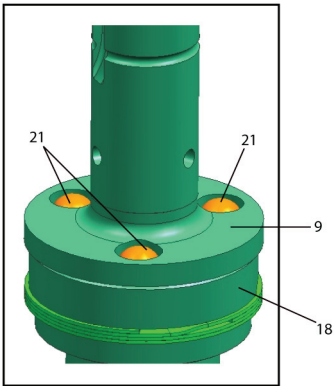

9. Grease ball groove of lower race (14) with **Ingersoll Rand** # 40036-1 Grease and slide on driver shaft (9).

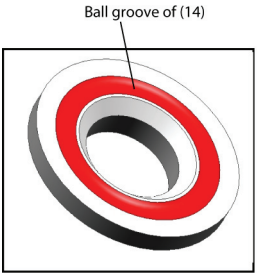

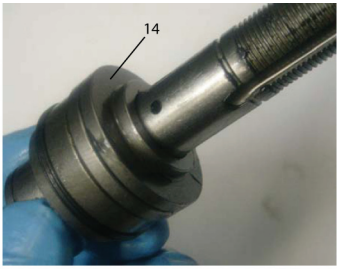

10. Grease Plunger's (12) outer surface with **Ingersoll Rand** # 40036-1 Grease. Insert Plunger Into Driver Shaft's (9) Hole through upper driven jaw's hole. See section view below for the proper placement.
Note: Make sure that the balls placed in step (3) do not walk out.

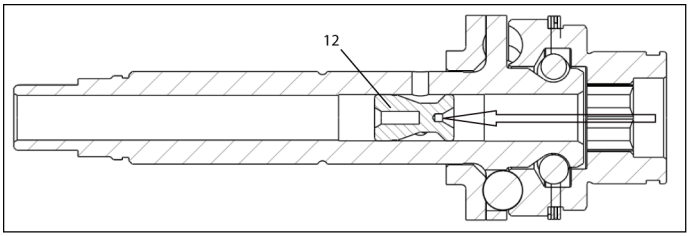

11. Grease 3 X cross holes of driver shaft with **Ingersoll Rand** 40036-1 Grease and Insert 2 X Plunger Ball 2.38mm (19) Per Hole. See section view below for the proper placement.

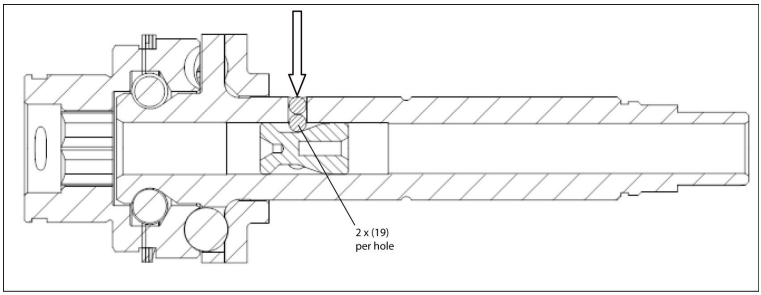

12. Grease I.D of shutoff collar (13) with **Ingersoll Rand** # 40036-1 Grease. Slip shutoff collar over drive shaft.

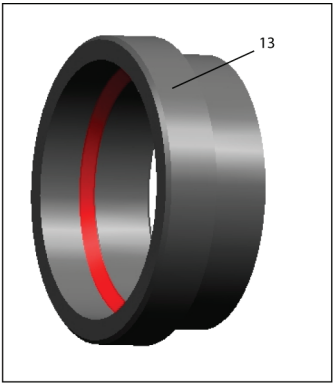

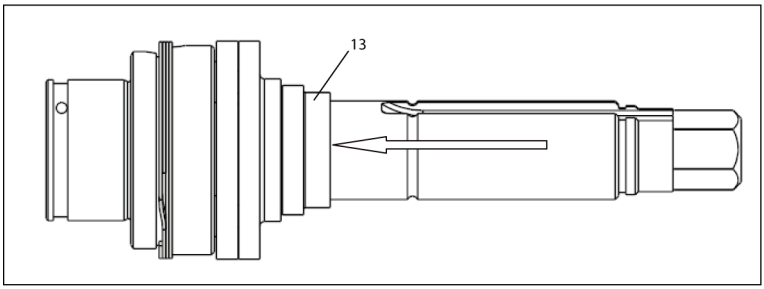

13. Slip Collar Spring (2) over Drive Shaft. Flat face of Collar Spring Must Sit on the Step of Shutoff Collar.

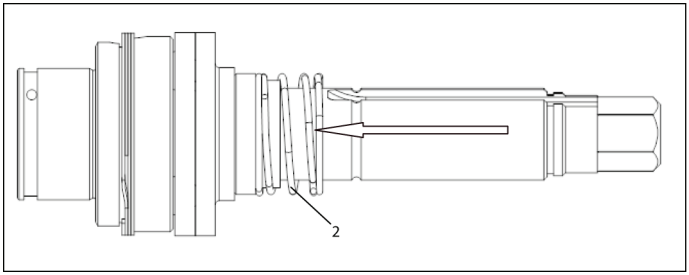

14. Slip Spring Guide (10) over Drive Shaft. The Other Flat Face of Collar Spring must sit on the step of Spring Guide.

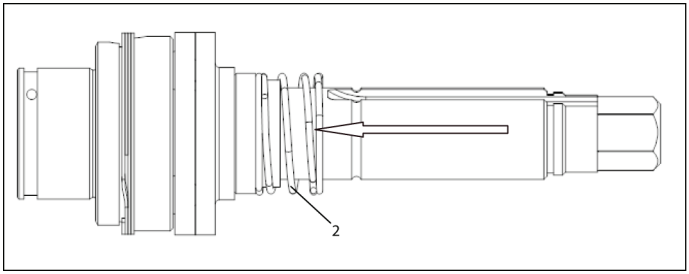

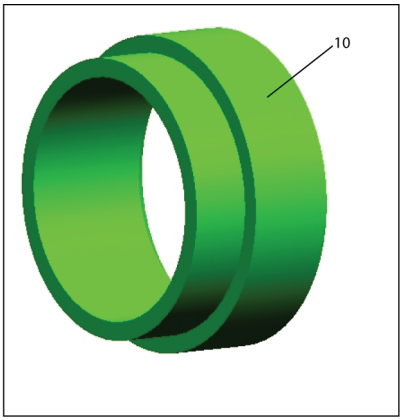

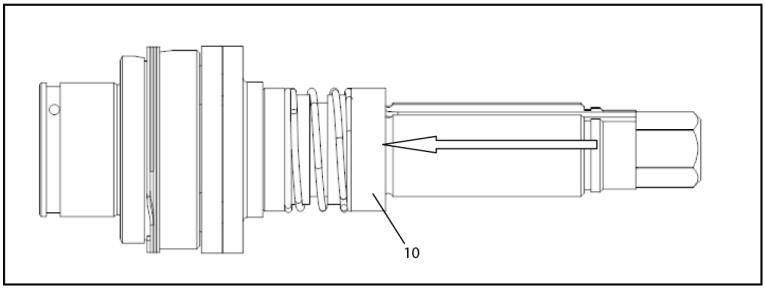

15. Use Retaining Ring tool (80187362) to place Retaining Ring (4) on Driver Shaft (9) Groove.

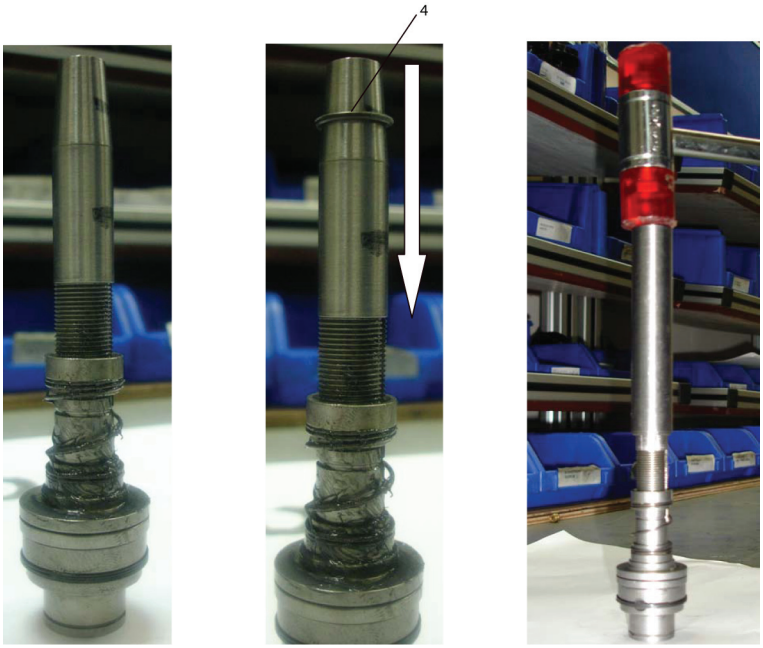

Note: 1. Check That Retaining Ring (4) is Correctly Positioned onto Driver Shaft's (9) Groove. 2. Make Sure that the Plunger Positioned in Steps 10 and 11 is in its Position.

16. Grease collar spring, shutoff collar and spring guide with **Ingersoll Rand** # 40036-1 grease in assembled condition.

17. Coat both the flat ends of clutch spring (1) with **Ingersoll Rand** # 40036-1 Grease. Place clutch spring onto lower jaw (14).

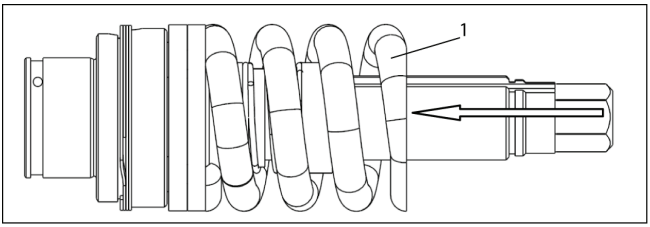

18. Grease both faces of spring guide (15) with **Ingersoll Rand** # 40036-1 grease and place over clutch spring (1).

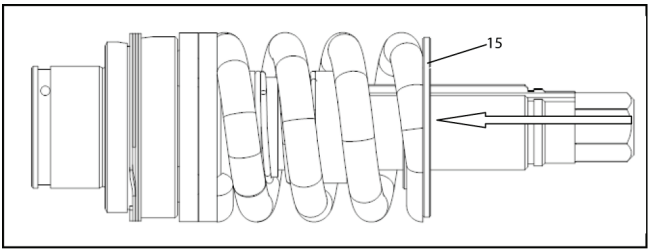

19. Grease both faces of Bearing (8) with **Ingersoll Rand** # 40036-1 grease and place over spring guide (15).

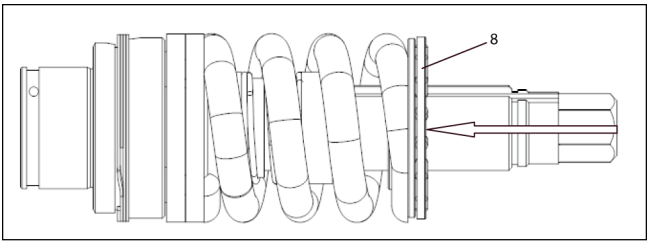

20. Slide Lock Nut Washer (17) onto above Assembly. Align Key on Lock Nut Washer with Keyway In Driver Shaft. See View Below for The Proper Placement.

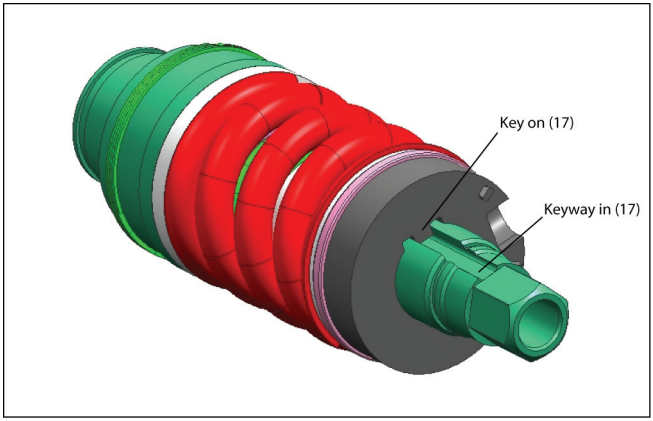

21. Grease Ball Race of Adjustment Nut (5) with **Ingersoll Rand** # 40036-1 Grease and place 22 X Ball 2.78mm (20) in it.

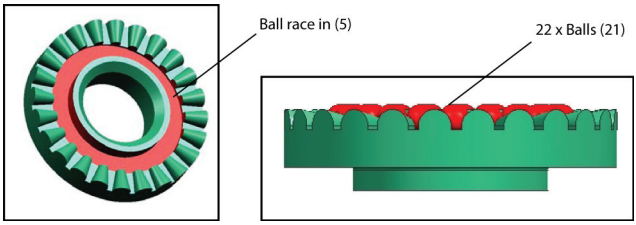

22. Thread Adjustment Nut (5) with balls in it onto Assembly of Step (20) and tightened with hand first.

Note:

1. Hold assembly in the upward direction as shown in view below, otherwise the balls placed in adjustment nut in Step 21 will walk out.
2. Also Hold Nut Lock Washer (17) in the assembly with hand, otherwise the parts will walk out.

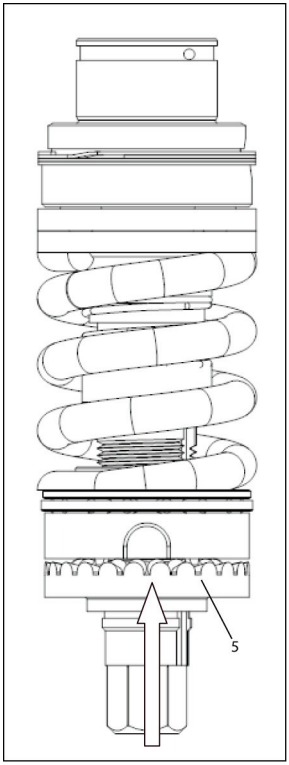

23. Insert the Bit of torx Driver (125116) in the teeth of adjustment nut and nut lock washer's (17) slot. Rotate torx driver in counter clockwise direction to tighten adjustment nut.

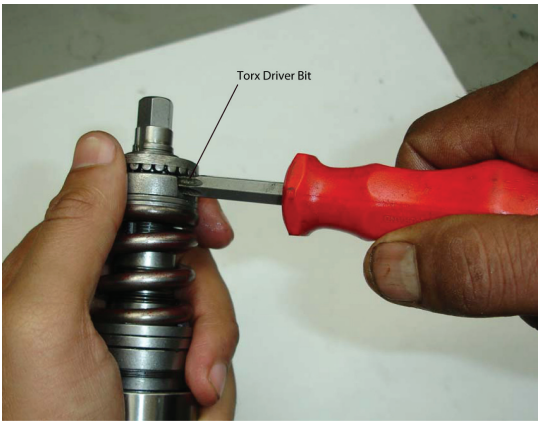

24. Place Retaining Ring (3) on driver shaft's (9) retaining ring groove.

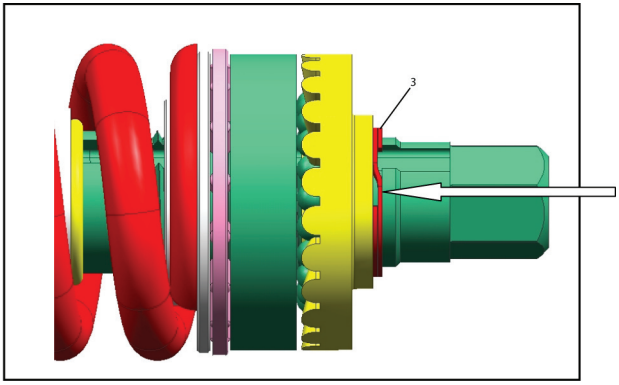

25. Grease unshielded side of Bearing (7) with **Ingersoll Rand** # 68 Grease.

26. Mount Bearing (7) onto upper driven jaw (18). Press bearing inner race during pressing.
    Note: Unshielded side of bearing must face downward in picture below.

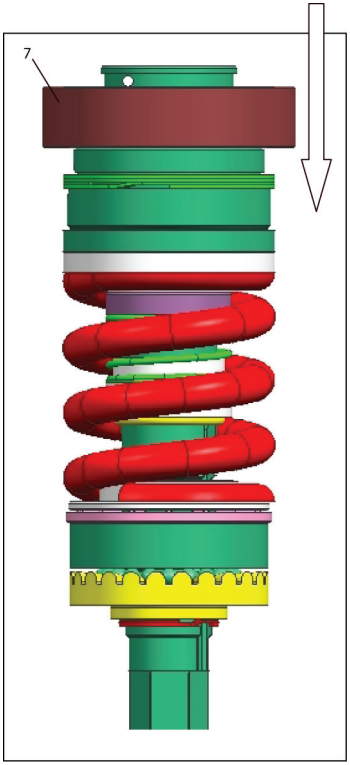

Note: Assemble Push Rod (6), Sun, Pin (Qa6-15) and Retaining Ring (Qa8-701) During Assembly of Complete tool.

Assembly Instructions for Direct Drive Module

1. Grease Unshielded Side of Bearing (7) with **Ingersoll Rand** # 68 Grease.
2. Mount Bearing (7) onto Driver Shaft (18). Press bearing inner race during pressing.
   Note: Unshielded side of bearing must face downward in picture below.

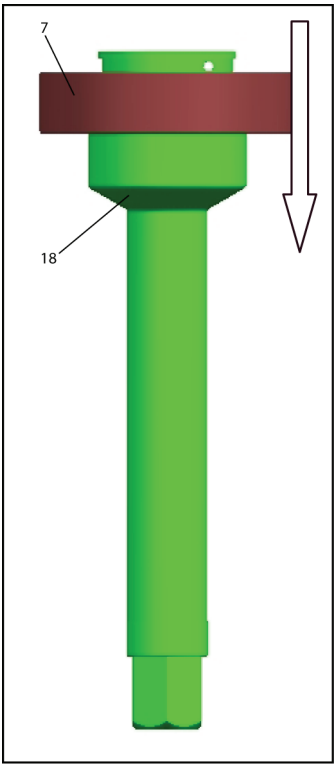

Note: Assemble Push Rod (6) during assembly of complete tool.

Clutch Cover Assembly Exploded View

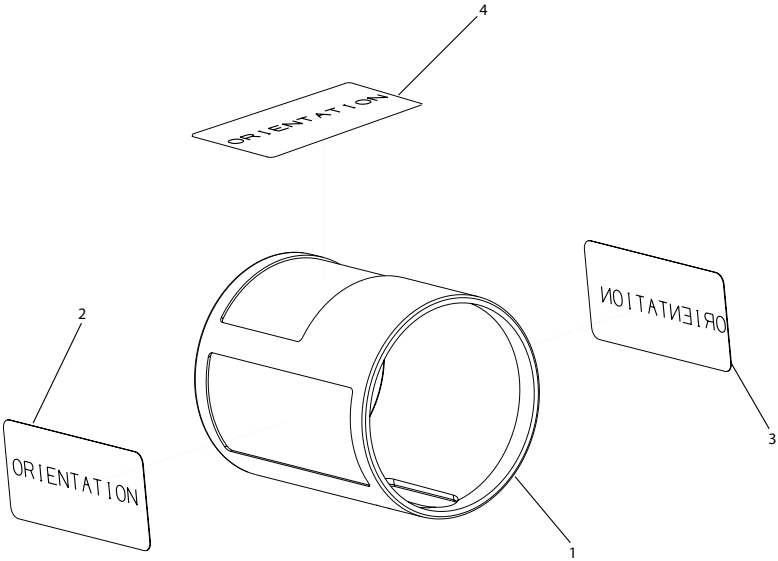

Clutch Cover Assembly Parts List

Item	Part Description	Part Number	
	Clutch Cover Assembly	QA6-A415	QA8-A415
1	**Clutch Cover**		
2	Nameplate	QA6-301	QA6-301
3	Information Label	QA6-299	QA6-299
4	Warning Label	WARNING-27-99	WARNING-27-99

Second Stage Exploded View

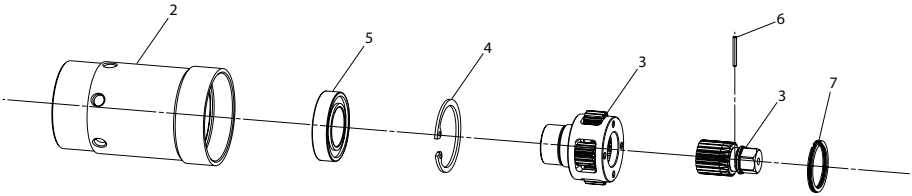

(Dwg. RG_80221716)

Second Stage Parts List

Item	Part Description	Part Number			
	2nd Stage Gear Assembly	**QA6-M37-3P33**	**QA6-M37-4P50**	**QA6-M37-5P08**	**QA6-M37-4P27**
1	Sun	QA6-17-3P33	QA6-17-4P50	QA6-17-5P08	QA6-17-4P27
2	Gear Case	QA6-1-37	QA6-1-37	QA6-1-37	QA6-1-37
3	Spindle Assembly	QA6-A8-3P33	QA6-A8-4P50	QA6-A8-5P08	QA6-A8-4P27
4	Snap Ring	161M13N30	161M13N30	161M13N30	161M13N30
5	Bearing	R1602-510	R1602-510	R1602-510	R1602-510
6	Pin	QA6-15	QA6-15	QA6-15	QA6-15
7	Retaining Ring	QA8-701	QA8-701	QA8-701	QA8-701
8*	Spacer	-	-	-	-

Item	Part Description	Part Number				
	2nd Stage Gear Assembly	**QA8-M37-5P64**	**QA8-M37-3P68**	**QA8-M37-3P32-1**	**QA8-M37- 3P32-2**	**QA8-M37-4P64**
1	Sun	QA8-17-5P64	QA8-17-3P68	QA6-17-5P08	QA6-17-5P08	QA6-17-5P08
2	Gear Case	QA8-22-37	QA8-22-37	QA8-22-37	QA8-22-37	QA8-22-37
3	Spindle Assembly	QA8-A8-5P64	GEA240- A216	QA8-3P32-32-216	QA8-3P32- 31-216	QA8-4P64-32-216
4	Snap Ring					
5	Bearing	R38P-606				
6	Pin	QA6-15	QA6-15	QA6-15	QA6-15	QA6-15
7	Retaining Ring	QA8-701	QA8-701	QA8-701	QA8-701	QA8-701
8*	Spacer	-	GEA240-80	GEA240-80	GEA240-80	GEA240-80

* Not Illustrated.

Tooling Required

Standard tools and Products

- Manual Press
- **Ingersoll Rand** # 90 Grease
- Internal Circlip Pliers
- **Ingersoll Rand** # 68 Grease

Assembly Instructions for Second Stage

Assembly of (QA6-M37-3p33), (QA6-M37-4p50), (QA6-M37-5p08), (QA6-M37-4p27)

1. Coat Bearing (5) with **Ingersoll Rand**# 68 Grease. Place bearing in gear case (2) with hand first and then press using manual press to butt against the placement face of gear case. Support bearing outer race during pressing. See section view below for the proper placement.

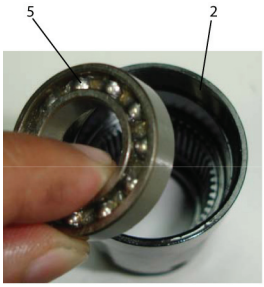

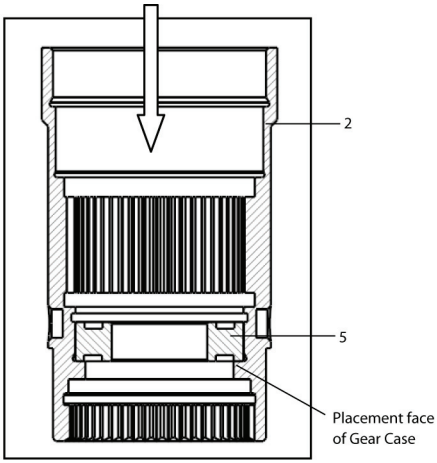

2. Secure Bearing (5) with Retaining Ring (4) using internal circlip pliers. See section and detail views below for the proper placement.

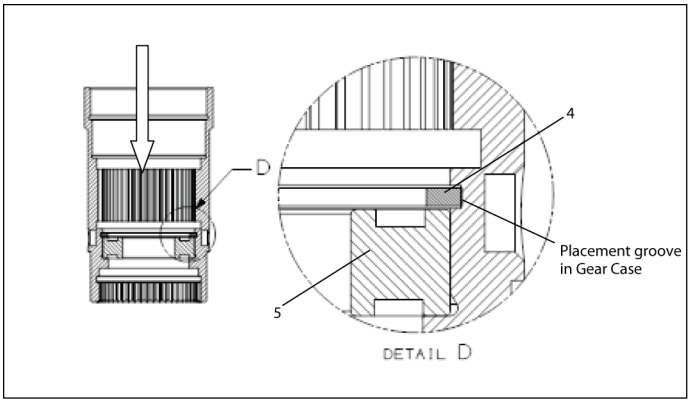

3. Grease Gear Case's (2) Splines with **Ingersoll Rand** # 90 Grease. Place spindle assembly (3) onto bearing in gear case with hand first and then press using manual press to butt against the placement face of bearing. Support bearing inner race during pressing. See section and detail views below for the proper placement.
   Note: Make sure that gearing matches before pressing spindle assembly onto bearing.

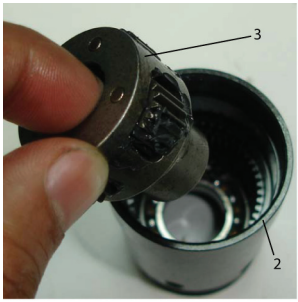

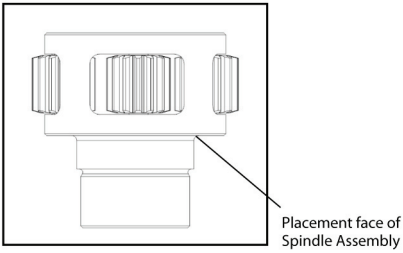

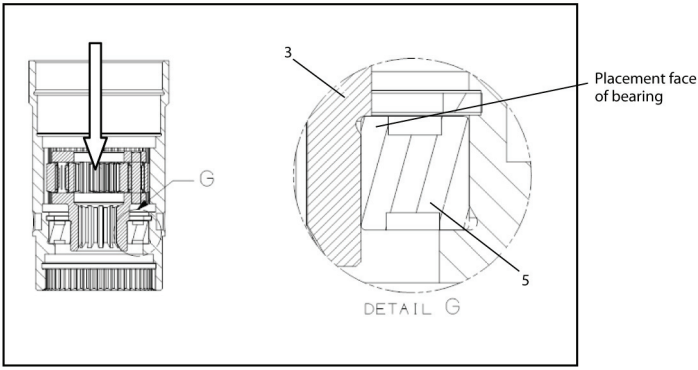

4. Grease Spindle Assembly's (3) Gears with **Ingersoll Rand** # 90 Grease.

Assembly of (QA8-M37-5p64)

1. Place Bearing (5) in Gear Case (2) with hand first and then press using manual press to butt against the placement face of gear case. Support bearing outer race during pressing. See section and detail views below for the proper placement.

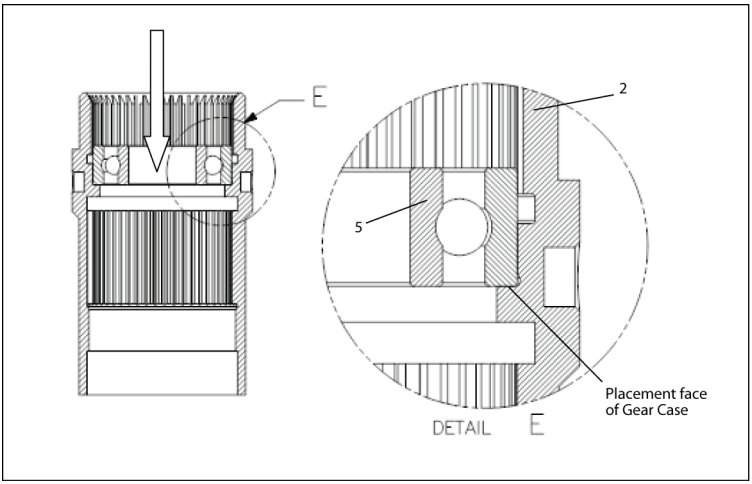

2. Grease Gear Case's (2) Splines with **Ingersoll Rand** # 90 Grease. Place Spindle Assembly (3) onto bearing in gear case with hand first and then press using manual press to butt against the placement face of bearing. Support bearing inner race during pressing. See section and detail views below for the placement.
   Note: Make sure that gearing matches before pressing spindle assembly onto bearing.

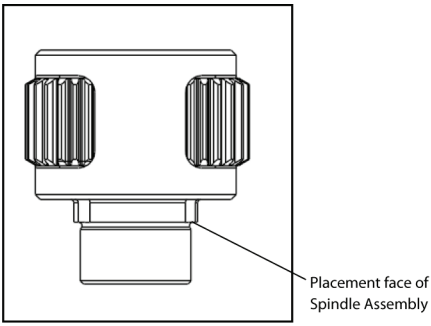

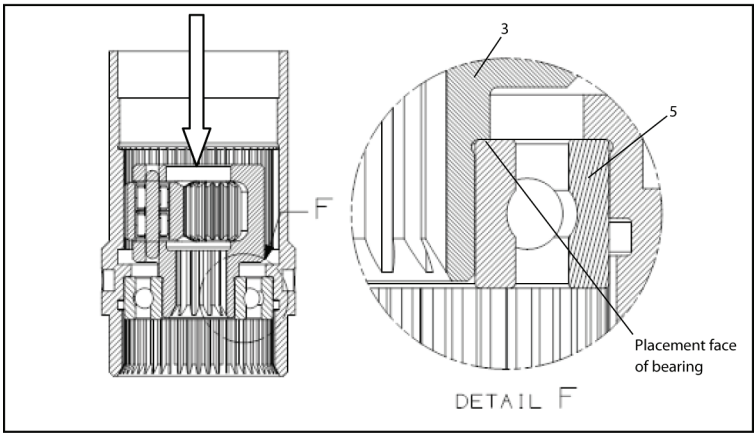

Assembly of (QA8-M37-3p68), (QA8-M37-3p32-1), (QA8-M37-3p32-2), (QA8-M37-4p64)

1. Grease Spacer's (8) face with Grease. Grease on spacer's face is used to hold it on spindle's face during placing the assembly in gear case.

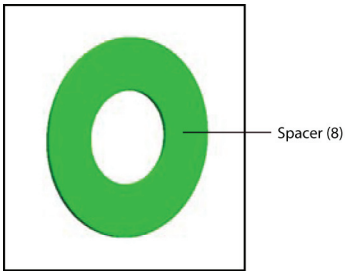

2. Place Spacer on the placement diameter of spindle assembly (3) and butt against the face of spindle as shown in views below.

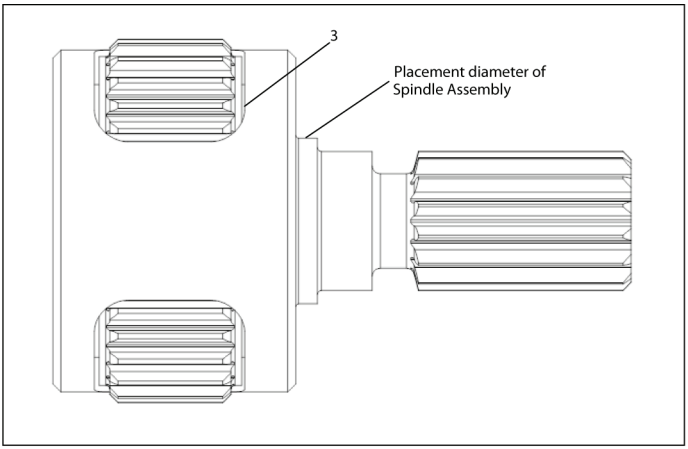

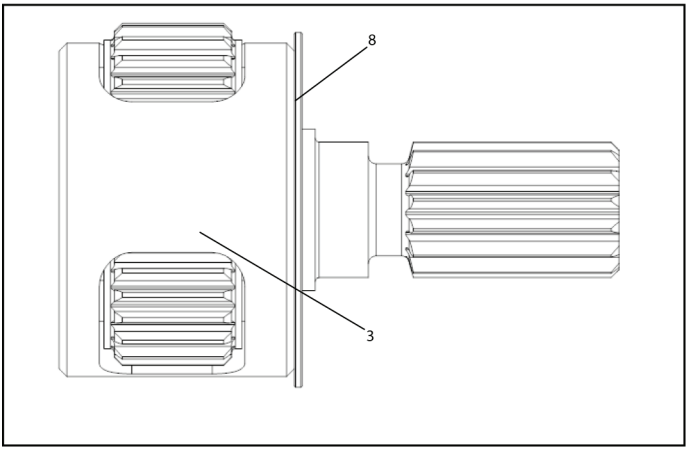

3. Grease Gear Case's (2) Splines with **Ingersoll Rand** # 90 Grease. Place The above Assembly (I.e Spindle Assembly and Spacer) In Gear Case (2). Spacer (8) Mounted on Spindle Assembly Must Butt Against The Placement Face of Gear Case. See Section View for The Proper Placement.
   Note: Make sure that gearing matches.

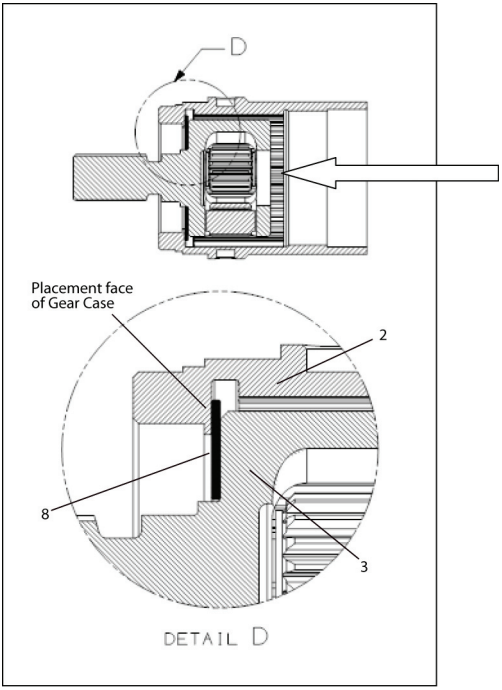

4. Grease Spindle Assembly's (3) gears with **Ingersoll Rand** # 90 grease.

Note: Assemble Sun (1), Pin (6) & Retaining Ring (7) during assembly of complete tool.

Third Stage Exploded View

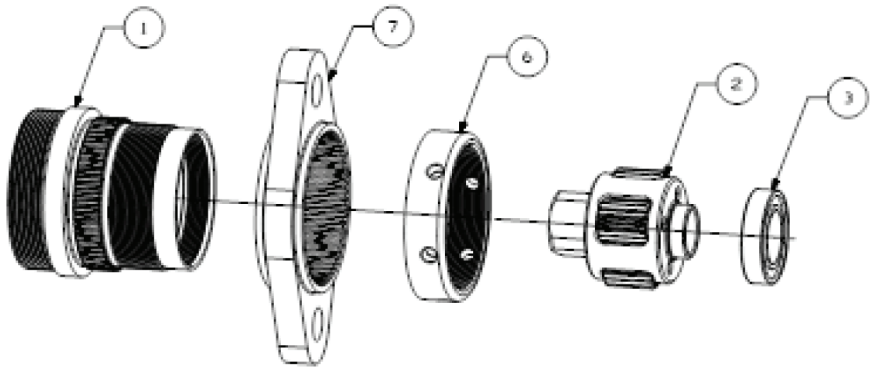

(Dwg. RG_80223357)

Third Stage Parts List

Item	Part Description	Part Number		
	3rd Stage Gear Assembly	**QA8-M37-4P29-1**	**QA8-M37-4P29-2**	**QA8-M37-4P067**
1	Gear Case	QA8-31-37	QA8-32-37	QA8-32-37
2	Spindle Assembly	QA8-A8-4P29-1	QA8-A8-4P29-2	QA8-A8-4P067
3	Bearing	R1602-510	R1602-510	R1602-510
4*	Spacer	QA8-208	-	-
5*	Spacer	QA8-442	-	-
6	Coupling Nut	-	QA8-47	QA8-47
7	Flange	-	QA8-48	QA8-48

* Not Illustrated.

Tooling Required

Standard tools and Products

- Manual Press
- **Ingersoll Rand** # 90 Grease
- **Ingersoll Rand** # 68 Grease
- Torque Wrench
- Spanner Wrench

Assembly Instructions for Third Stage

1. Mount Flange (7) on Gear Case (1). Match gear case's splines with flange's splines.
   Note: See tool Assembly section for proper mounting.

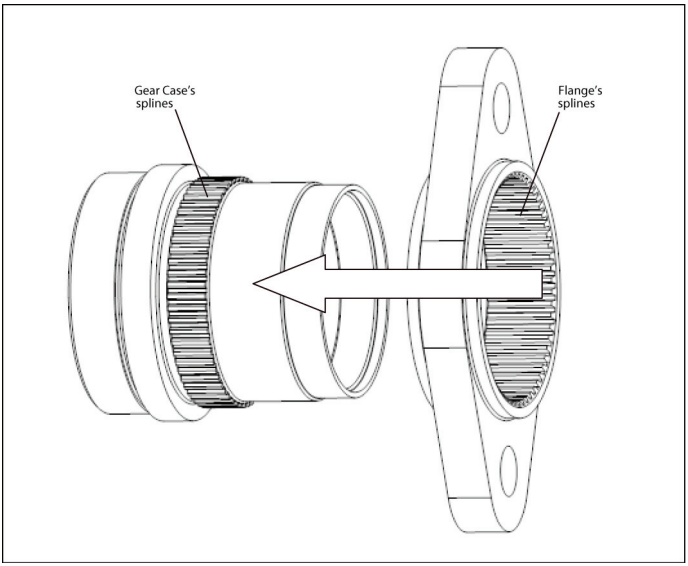

2. Tighten Coupling Nut (6) Counterclockwise onto Gear Case (1) to 90 Nm (66 Ft-lb) by using a torque wrench.

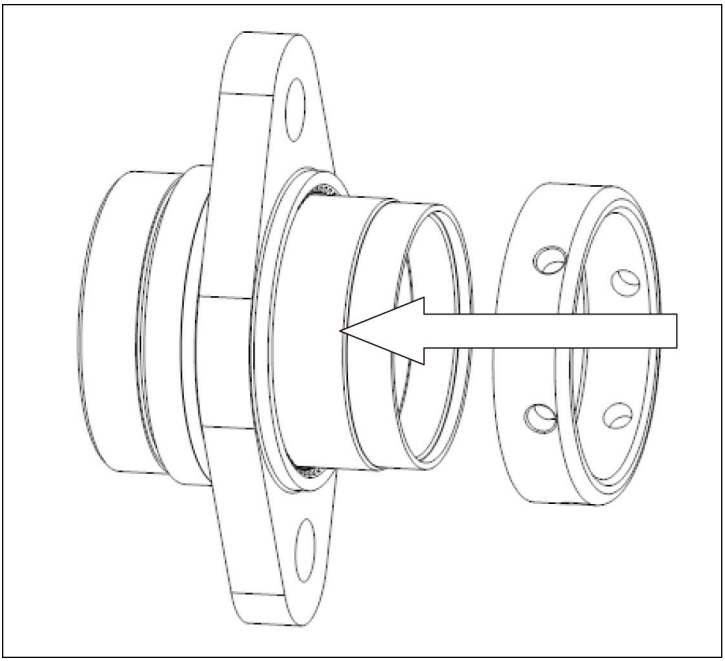

3. Grease Bearing (3) with **Ingersoll Rand** # 68 Grease.
4. Press Bearing onto bearing diameter of spindle assembly (2) to butt against the bearing placement face. Support bearing inner race during pressing. See views below for the proper placement.

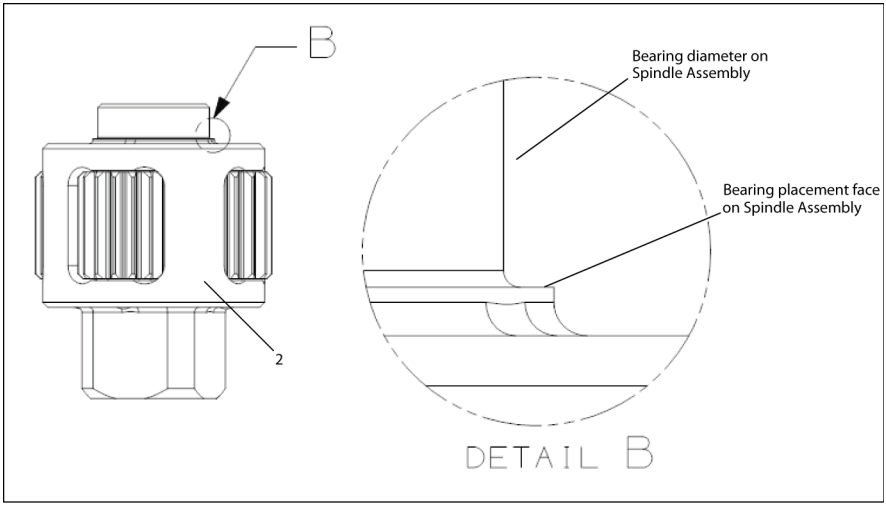

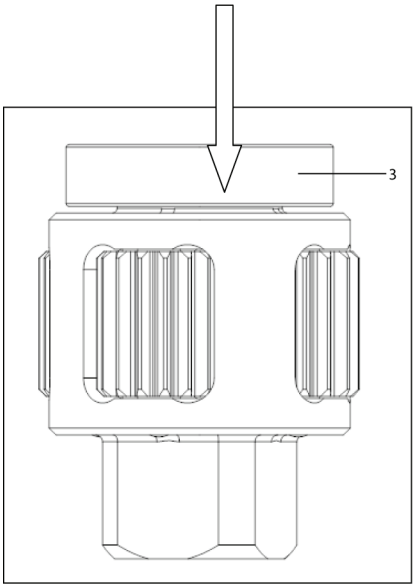

Angle Head Asembly Exploded View

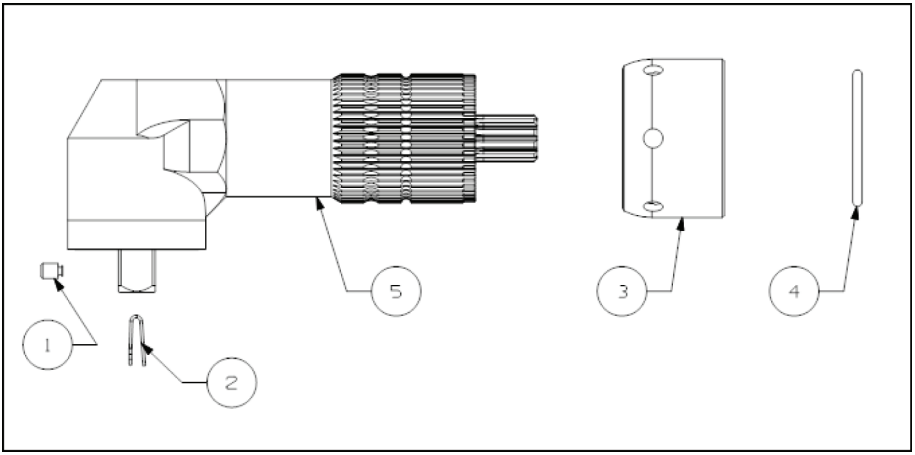

Dwg. RG_80223563)

Note: All Angle Head Assembly and float spindle assembly are sold as complete assembly to ensure maximum life of tool. Parts details, exploded views and assembly instructions are provided for loose parts only.

Angle Head Assembly Parts List

Item	Part Description	Part Number				
	Angle Head Assembly	**QA6-R35S06- A550**	**QA6-R35S08- A550**	**QA6-R43S08- A550**	**GAA6S8**	**AA16S12**
1	Pin	131617	132048	804-716	804-716	
2	Spring	124491	124492	5UHD-718	5UHD-718	
3	Coupling Nut	15E2-27	15E2-27	15E2-27	DAA4-27	
4	Coupling Nut Retainer	GEA2-29	GEA2-29	GEA2-29	DAA4-29	
5	Angle Head Subassembly					

Float Spindle Assembly Parts List

Item	Part Description	Part Number			
	Spindle Assembly	**QA64S6**	**QA64S8**	**GE4S8**	**160E4S8**
1	Retainer	5020-716	804-716	804-716	804-716
2	Spring	401-718	5UHD-718	5UHD-718	5UHD-718
3	Coupling Nut	15E2-27	15E2-27	DAA4-27	GEA240-27
4	Coupling Nut Retainer	GEA2-29	GEA2-29	DAA4-29	160E4-29
5	Spindle subassembly				

Tooling Required

Standard tools and Products

- Vice
- Heavy Duty Retaining Ring Pliers

Assembly Instructions for Pin/retainer and Spring

1. Insert Pin/Retainer (1) in the pin hole of output shaft of angle head subassembly (5).

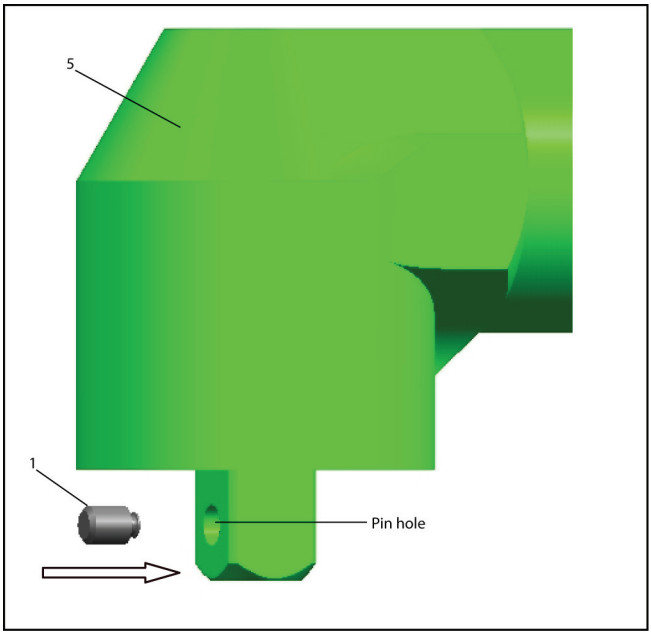

2. Insert Spring (2) in the spring hole of output shaft of above assembly. Press with hand to slip it over the groove of pin (1). 'C' shaped profile of spring (2) must sit onto the groove of pin (1). See views below for the proper placement.

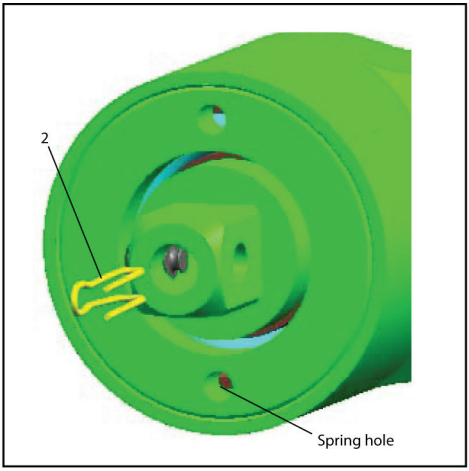

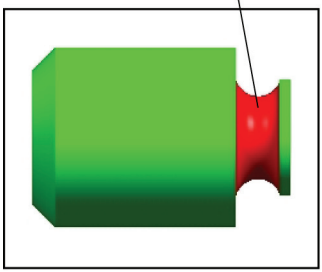

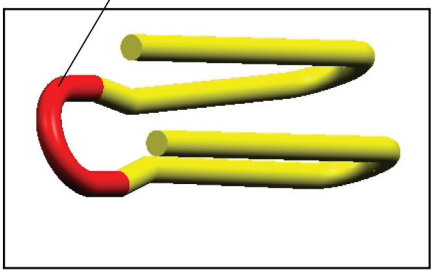

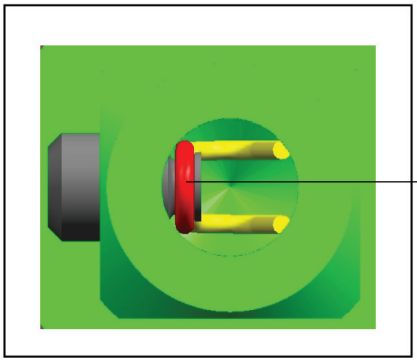

Assembly Instructions for Coupling Nut and Coupling Nut Retainer

1. Slide Coupling Nut (3) over Angle Head Subassembly.
   Note: Coupling Nut must be orientated as shown in view below.

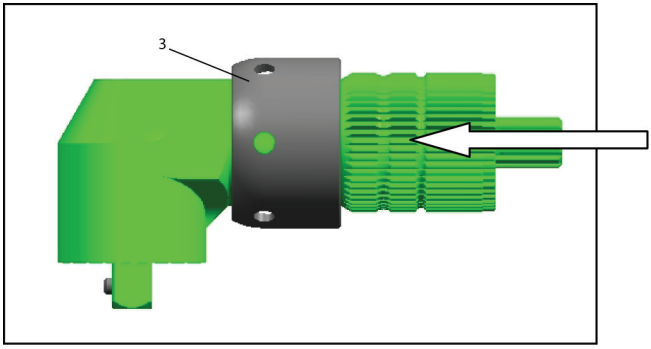

2. Place Coupling Nut Retainer (4) on the groove of angle housing of above assembly by using heavy duty retaining ring pliers.

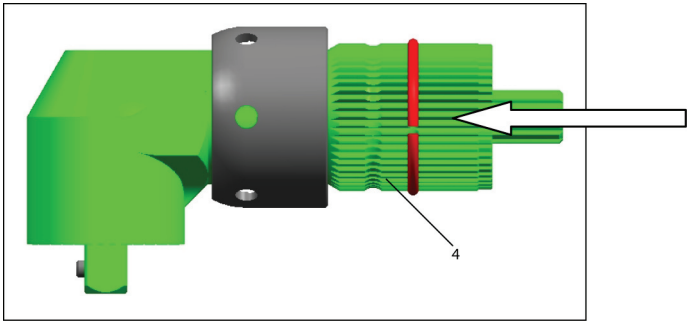

Assembly Instructions for Complete tool

Tooling Required

Standard tools and Products

- Spanner Wrench
- Vice
- Torque Wrench
- **Ingersoll Rand** # 68 Grease

Valve Assembly Exploded View

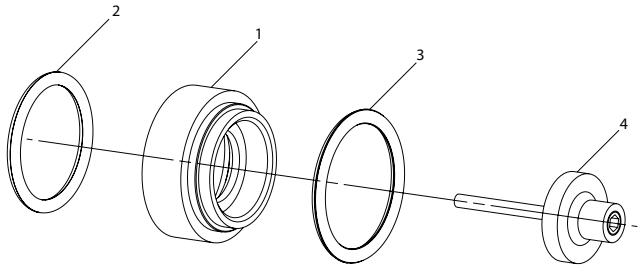

(Dwg. RG_45504628)

Valve Assembly Parts List

Item	Part Description	Part Number	
	Valve assembly	**QA6-A159**	**QA8-A159**
1	Valve Seat	QA6-A159	QA8-A159
2	O-Ring 15.6 mm		
3	O-Ring 17.17 mm		
4	Shut off Valve	131128	131128

1. Grease O-ring (2) with **Ingersoll Rand** # 68 Grease. Mount it over the O-ring groove of reverse valve assembled in motor housing module.

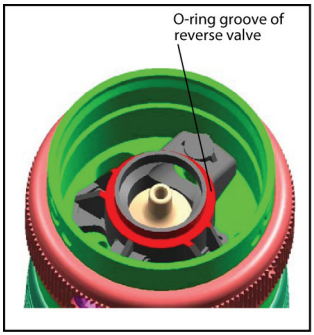

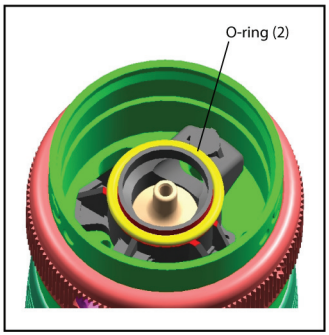

2. Mount Valve Seat (1) over The O-ring of above Assembly. Make sure that the O-ring (2) sits on the o-ring diameter of valve seat.

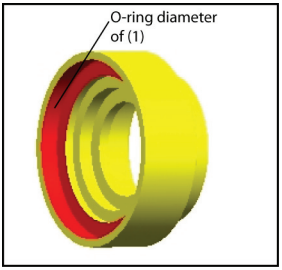

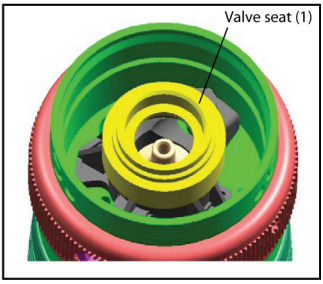

3. Place Shut-off Valve (4) on the shut-off valve groove of valve seat (1) of above assembly. Make sure that stem of shut-off valve passes through the hole in valve guide in motor housing.

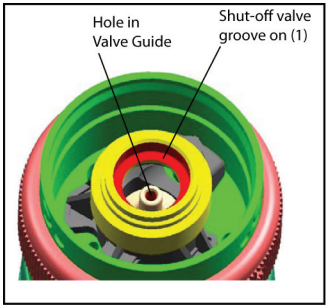

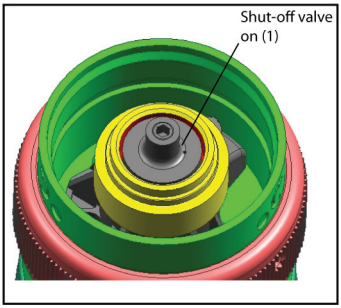

4. Grease O-ring (3) with **Ingersoll Rand** # 68 Grease. Mount It over The O-ring Groove (External) of Valve Seat (1) of above Assembly.

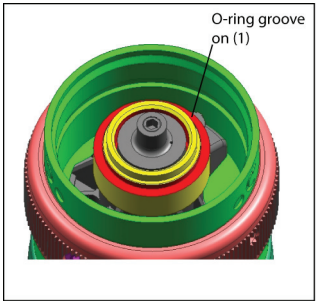

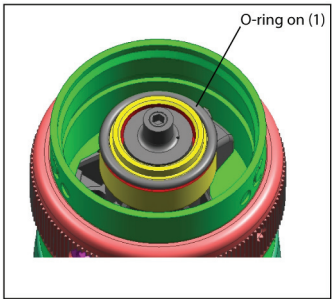

Assembly Instructions for Throttle Housing Module and Assembly (A)

1. Mount Throttle Housing Module onto above Assembly (A). The o-ring mounted in the motor housing module must sit in the groove of throttle housing. Thread the assembly clockwise by hand first and then tighten to 40 nm (30 ft-lb) by using spanner wrench and a torque wrench.

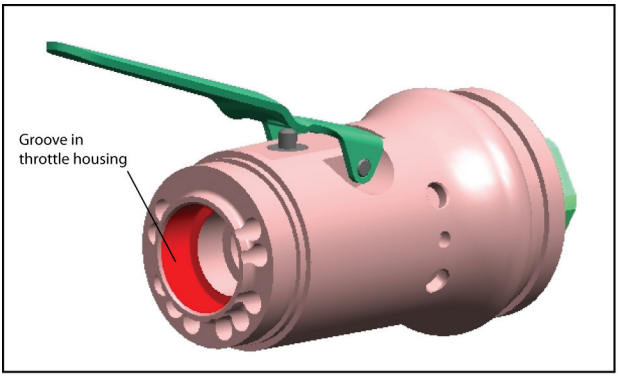

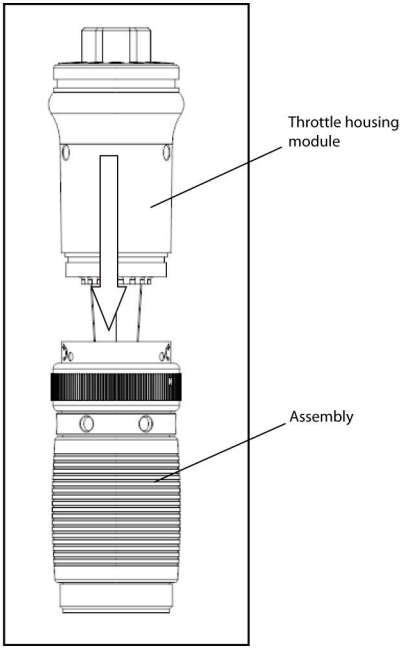

Assembly Instructions for Motor Module and Assembly (B)

1. Place Motor module inside the motor housing of above assembly (b). Align slot in front endplate with alignment hole in motor housing to make sure that the roll pin in rear endplate goes into locking hole in motor housing.

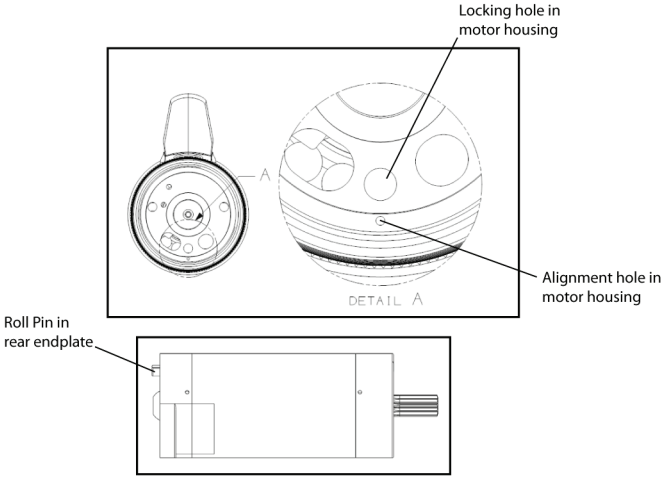

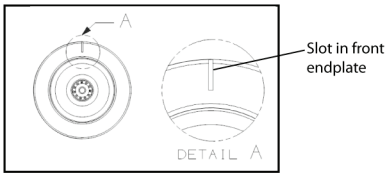

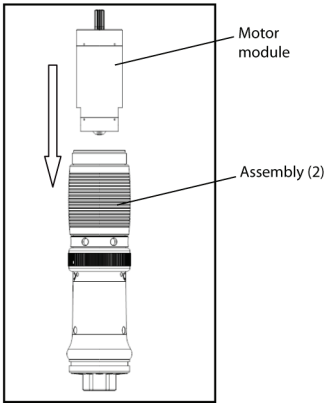

Note: Make sure that the roll pin in the rear endplate of motor module goes into the locking hole in motor housing of assembly (b).

Assembly Instructions for First Stage and Assembly (C)

1. Mount First Stage onto above Assembly (C). Align rotor's splines with first stage's planet gears. Also the pilot diameter of front cap in first stage must pilot onto front endplate in motor module. Thread gear case with motor housing of assembly (c) clockwise by hand first and then tighten to 40 nm (30 ft-lb) clockwise by using spanner wrench and a torque wrench.
   Note: Do not over or under torque, motor may not function properly.

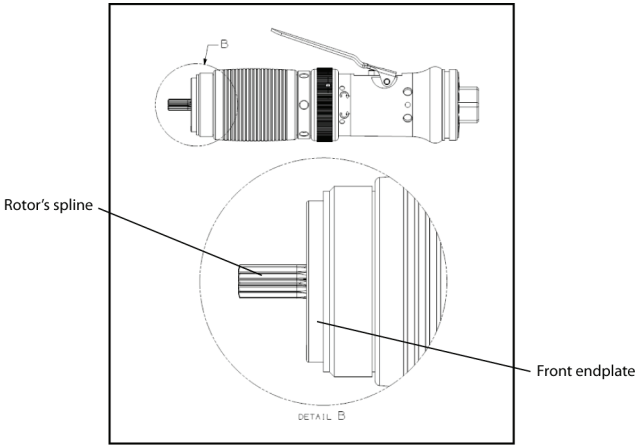

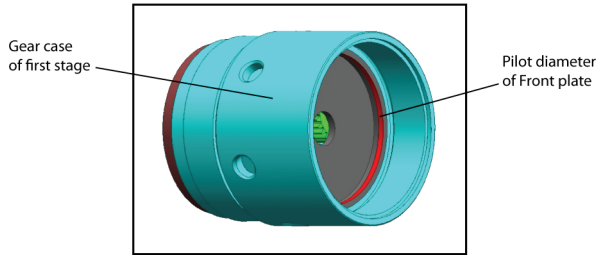

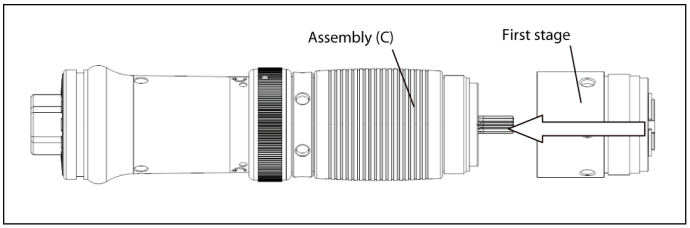

Assembly Instructions for Clutch Housing and Assembly (D)

1. Thread Clutch Housing with the gear case of above assembly (D) clockwise by hand first and then tighten to 70 Nm (52 Ft-Lb) clockwise by using spanner wrenches and a torque wrench.

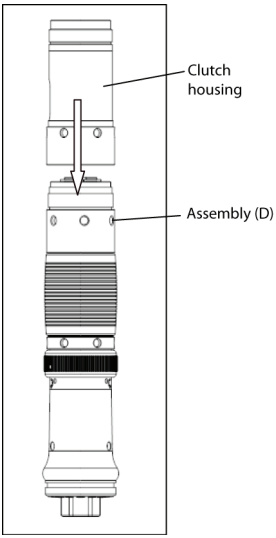

Assembly Instructions for Clutch Cover and Assembly (E)

1. Slide Clutch Cover Assembly onto Clutch Housing of above assembly (E). it must sit on pilot diameter of clutch housing and adjust in a way so that the clutch window in clutch cover opens clearing onto the clutch window in clutch housing of above assembly (E).

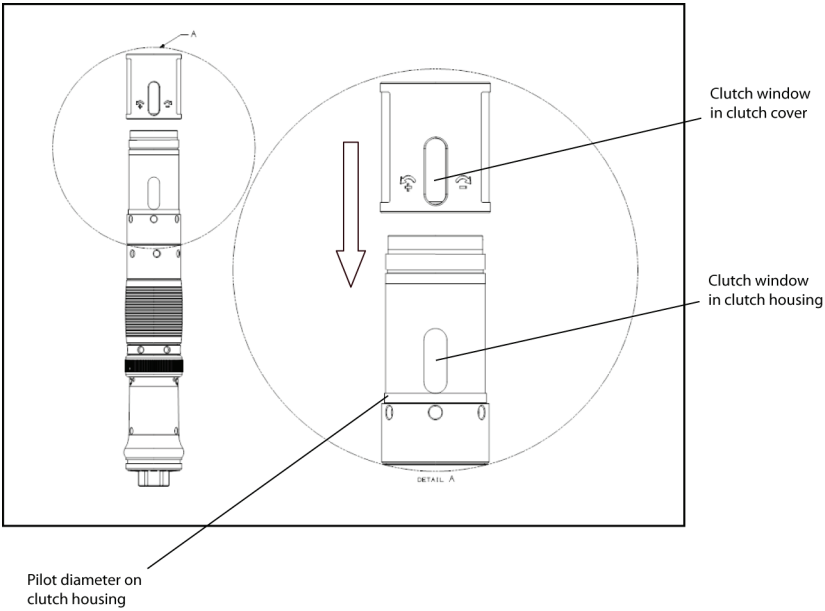

Assembly Instructions for Sun, Retaining Ring, Pin and Clutch Module

Note: Refer to Second stage module parts list for the selection of Sun for a particular module.

1. Place Hex side of Sun in the Upper Driver jaw of Clutch module.

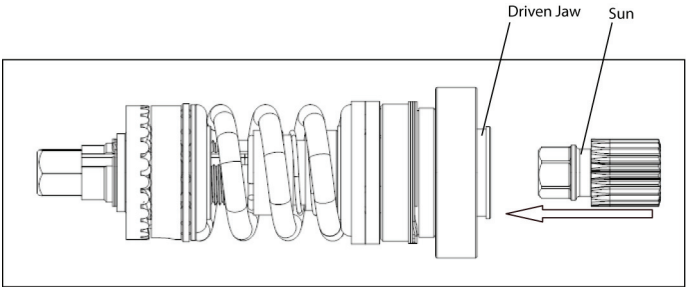

2. Insert Pin (QA6-15) into Upper Driven Jaw's pin hole to hold Sun in upper driven jaw. Pin must sit over the pin's groove in Sun.

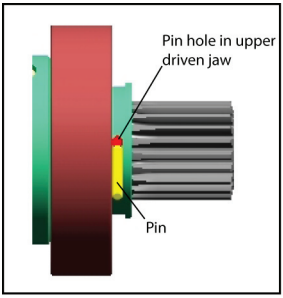

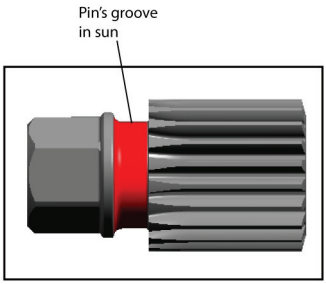

3. Place Retaining Ring (QA8-701) onto retaining ring groove of Upper driven jaw to Pin (QA6-15) in place.

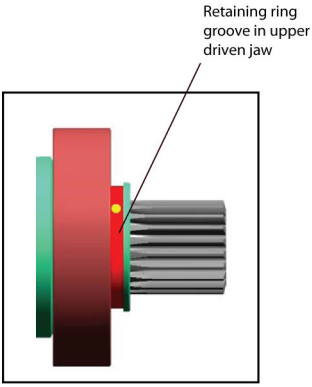

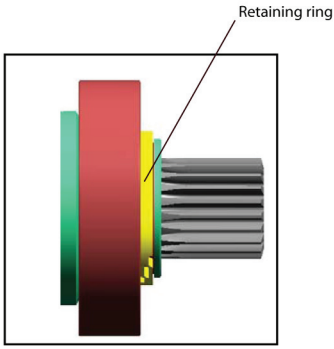

Assembly Instructions for Second Stage and Assembly (G)

1. Place Assembly (G) in Second stage. Align Sun's gears with the second stage's planet gears. Also the bearing of clutch module must sit against the bearing placement face of the gear case of second stage.

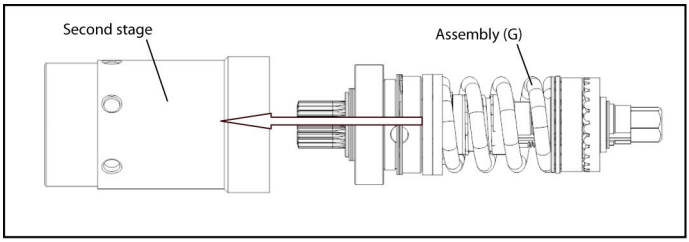

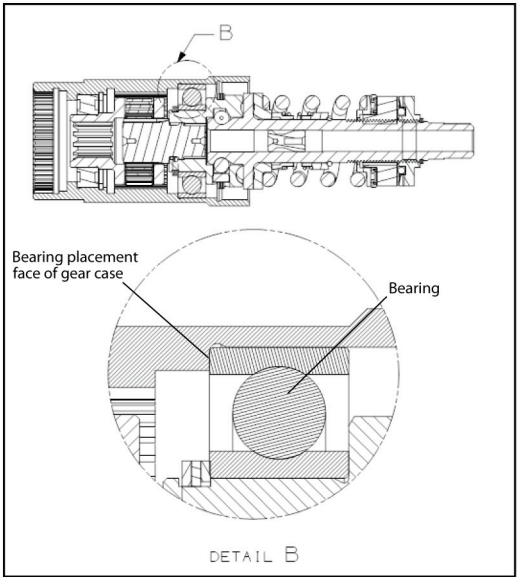

Assembly Instructions for Push Rod, Assembly (F) and (H)

1. Slide Push Rod (132017) through First Stage's gearing and Rotor's hole of Assembly (F).

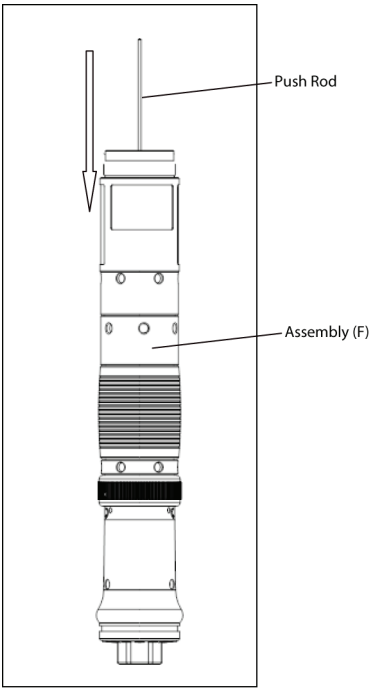

Assembly Instructions for Assembly (H) and (I)

1. Guide other end of the Push Rod of Assembly (I) into Driver Shaft's hole of the Assembly (H). Make sure that the push rod sits into the plunger's hole placed in the driver shaft. Thread Gear Case with the Clutch Housing counterclockwise by hand.

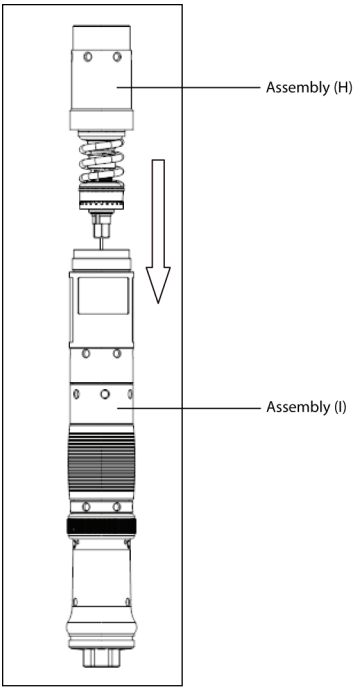

Adjustment of Push Rod Gap

Pushrod length controls the shutoff valve spacing in the backend housing of the tool. This spacing provides the proper air supply to the motor and controls the timing of the clutch mechanism. for best operation of tool, please follow the instructions below.

NOTICE

Replacement of any component between the shutoff valve and second stage gearing may change the tool's operating valve gap. to minimize down time, it is recommended to order a pushrod when replacing parts between these areas. During any assembly up to the second stage, recertify correct gap using this procedure.

Note: Pushrods that are too short will decrease motor performance and may cause tool to stall. Also, pushrods that are too long may cause tool to ratchet and not shutoff. This is why pushrod length is so important.

1. Connect tool to air supply.
2. with the second stage hand tight, turn the tool on and slowly unscrew the second stage from the clutch housing (clockwise) until tool stops.
   Note: If tool does not run when lever is initially pressed, pushrod is too short and needs to be replaced.
3. Release tool lever to reset air pressure. Repress lever and slowly tighten second stage until tool starts to rotate. from this point mark the housing to identify number of revolutions until it is hand tight (counterclockwise).
   Note: Valve gap can be measured based on number of revolutions. 1 revolution = 1 mm of valve gap.
4. Verify proper valve gap for the tool:
   QA6 = 0.75 mm to 1.0 mm = 0.75 revolutions to 1.0 revolutions
   QA8 = 1.0 mm to 1.25 mm = 1.0 revolutions to 1.25 revolutions
5. If the valve gap is less than the value in step 4, a new longer pushrod must be used and repeat steps 1-4.
6. If the valve gap is too large, take the actual number of revolutions measured in step 3 and subtract the maximum revolutions in step 4. Take this value and subtract it from the pushrod length to get the length the pushrod needs to be cut.
7. Repeat steps 1-6 until you have correct length.
   e.g. If the number of revolutions in step 3 comes out 1.5, then grind pushrod from 0.5 mm to 0.75 mm for QA6 tool and 0.25mm to 0.5mm for QA8 tool.
8. **Tighten second stage Gear Case with Clutch Housing counterclockwise to 70 Nm (52 Ft-Lb).**

For Two Stages Models

Assembly Instructions for Angle Head Assembly/Float Spindle Assembly and Assembly (J)

Note: Orientate Angle Head Assembly wrt. Lever as shown in the view below.

1. Align Angle Head Assembly's or Float Spindle Assembly's Pinion gearing with Second stage's spindle of Assembly (J). Also align Housing's external splines with Gear case's internal splines. Tighten Gear case with Coupling Nut mounted onto Angle head or Spindle clockwise by hand first and then to 90 Nm (66 Ft-Lb) clockwise by using spanner wrench and a torque wrench.

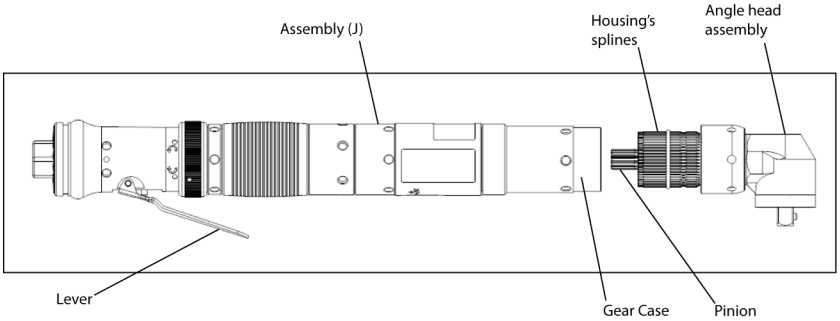

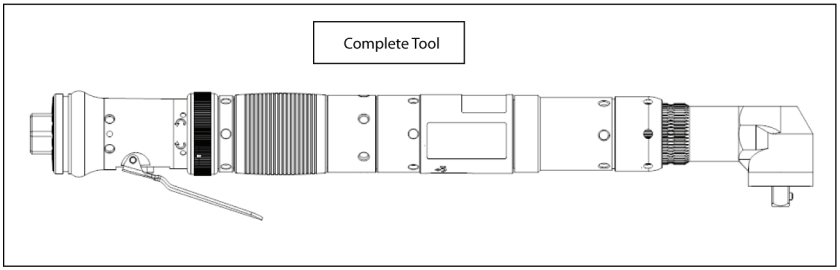

For Three Stages Models (QA8AA..150.., QA8AA..200.., QA8AA..225.., QA8AS..090.., QA8AS..115.., QA8AS..150.., QA8AS..180..)

Assembly Instructions for Third Stage and Assembly (J)

1. Align Second stage's spindle gears with Third stage's gears. Thread second stage's gear case with third stage's gear case counterclockwise by hand first and then to 90 Nm (66 Ft-Lb) counterclockwise.
   Note: for flange tools, hold flange in vice.

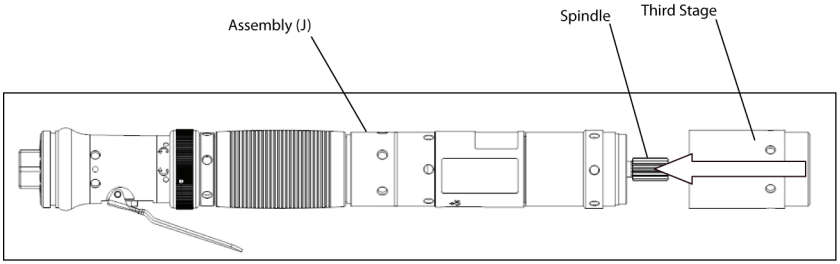

2. Mount Spacer (QA8-208) in Gear case (QA8-31-37) of the Third stage assembly (QA8-M37-4P29-1) for QAAA..150.. and QAAS..090.. models.

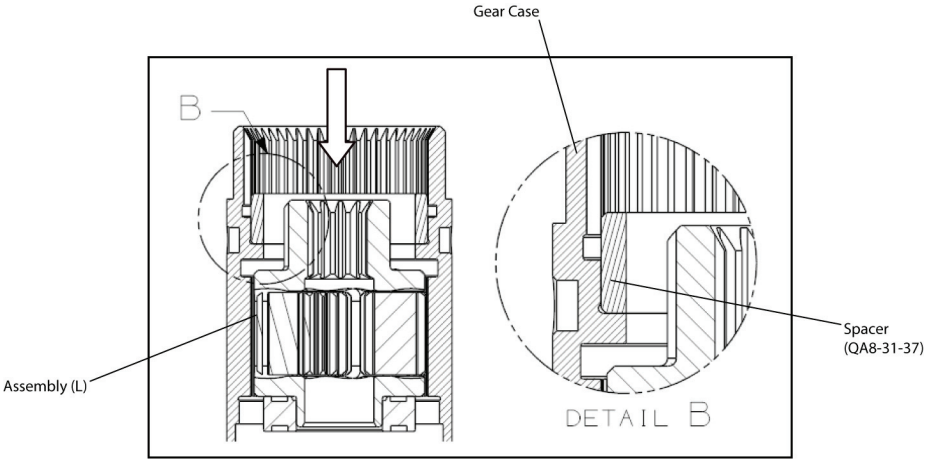

Assembly Instructions for Angle Head Assembly/Float Spindle Assembly and Assembly (L)

1. Mount Spacer (QA8S-442) on Float Spindle's (160E4S8) Pinion shaft for QA8AS..115.., QA8AS..150.., and QA8AS..180..models.

Mount Spacer (QA8A-442) on Angle Head's (AA16S12) Pinion shaft for QA8AA..200.., QA8AA..225..models.

Mount Spacer (QA8-442) on Angle Head's (GAA6S8) Pinion shaft for QAAA..150..model or Float Spindle's (GE4S8) Pinion shaft for QAAS..090.. models.

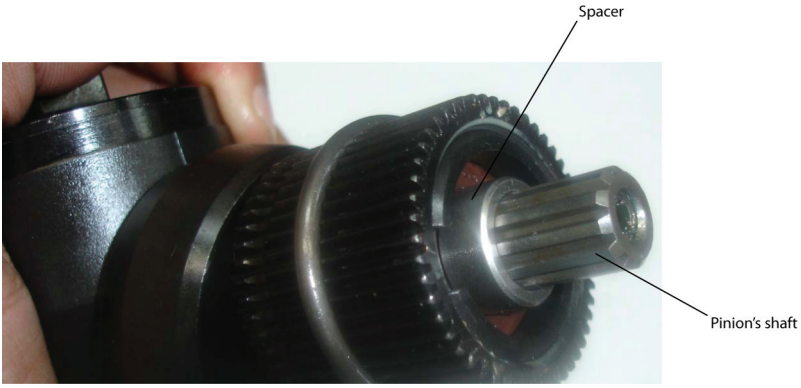

Note: Orientate Angle Head Assembly wrt. Lever as shown in the view below.

2. Align Angle Head Assembly's or Float Spindle Assembly's Pinion gearing with third stage's spindle of Assembly (L). Also align Housing's external splines with Gear case's internal splines. Tighten Gear case with Coupling Nut mounted onto Angle head or Spindle clockwise by hand first and then to 100 Nm (74 Ft-Lb) clockwise by using spanner wrench and a torque wrench.

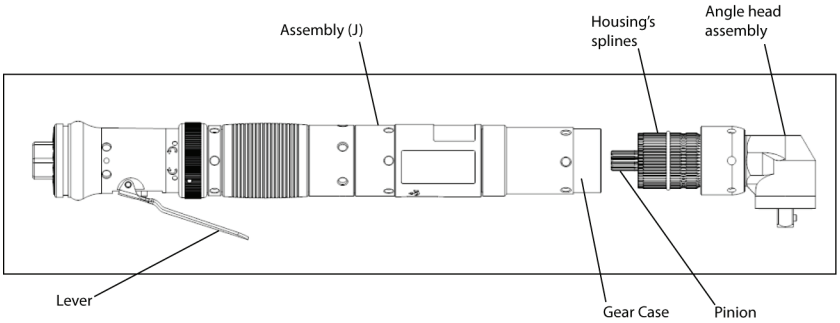

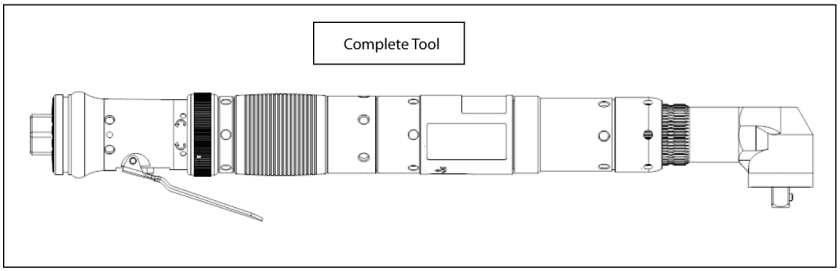

Remote Housing Kit Exploded Diagram

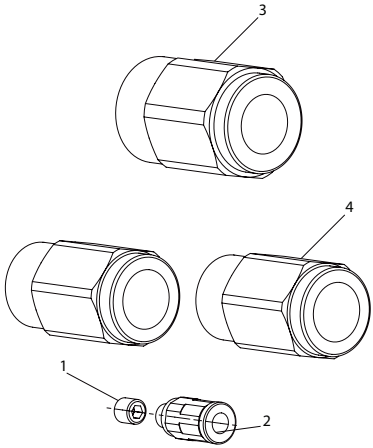

(Dwg. RG_45500832)

Remote Housing Kit Parts List

Item	Part Description	Part Number	
	Remote Housing Inlet Kit	**QA6-RB-K465**	**QA6-RN-K465**
1	Set Screw,M5		
2	Tube Fitting		
3	Tube Fitting		
4	Tube Fitting		

Tooling Required

Standard tools and Products

- Adjustable Spanner Wrench
- Hex Keys Set

Assembly Instruction for Remote Housing Kit

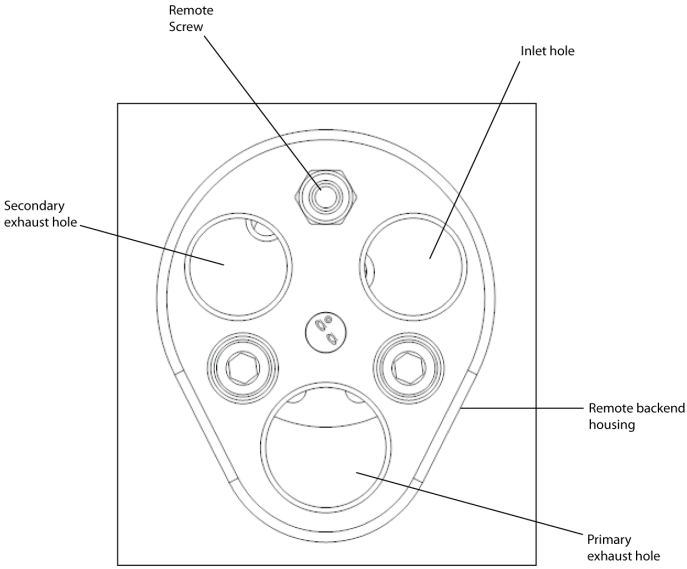

Note: The holes illustrated in above picture are for forward direction only. for reverse direction, secondary exhaust becomes the inlet and the inlet becomes the secondary exhaust.

Note: Set screw, M4 (1) is required if shut-off signal is not required.

1. Tighten Set Screw, M4 (1) onto Remote Screw in Remote Backend Housing clockwise using Hex key.

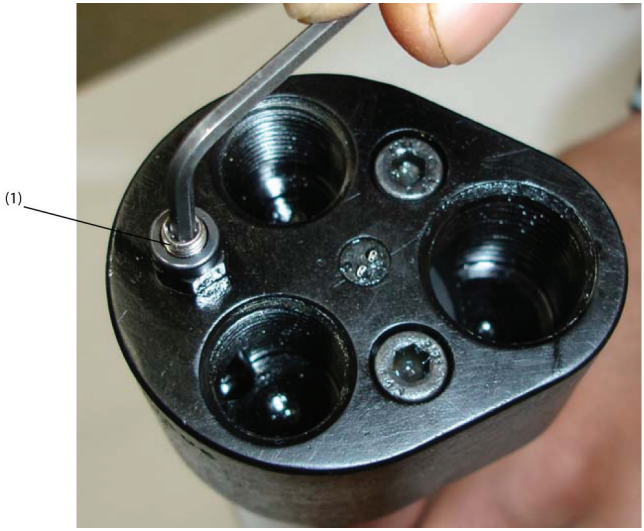

Note: Tube Fitting (2) is required to take shut-off signal from tool. In this case skip step (1)

1 (a). Tighten Tube fitting (2) onto Remote Screw in Remote Backend Housing clockwise using Adjustable spanner wrench.

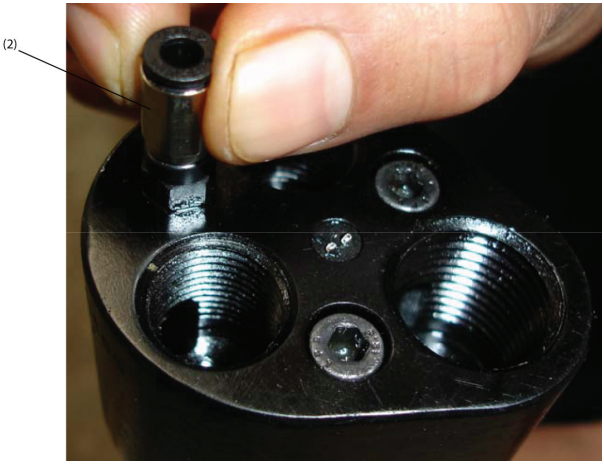

2. Tighten Tube Fitting (3) onto Primary exhaust hole threads in Remote Backend Housing clockwise using Adjustable spanner wrench.

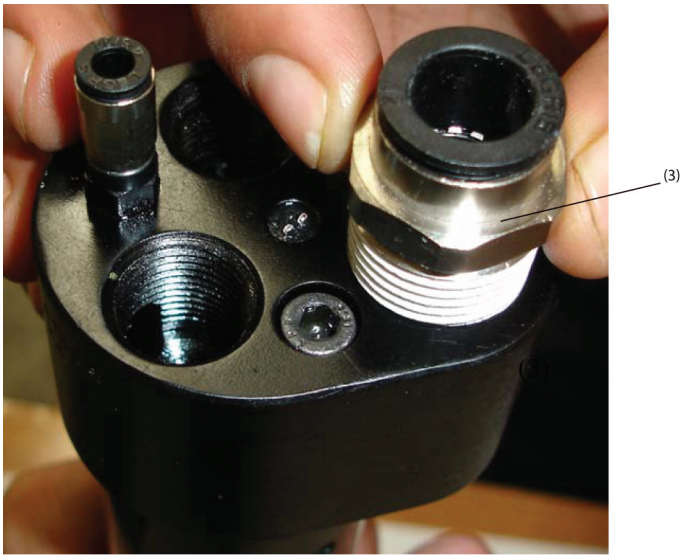

3. Tighten Tube Fitting (4) onto Inlet hole threads in Remote Backend Housing using spanner wrench.

4. Tighten Tube fitting (4) onto Secondary exhaust hole threads in Remote Backend Housing using spanner wrench.

Related Documentation

for additional information refer to:
Air Angle Wrench, Screwdriver or Nut Runner Product Safety Information Manual 04585006.
Air Angle Wrench and Nut Runner Product Information Manual 16601064.
Air Angle Wrench and Nut Runner Parts Information Manual 16601072.

Manuals can be downloaded from ingersollrandproducts.com.

ingersollrandproducts.com

© 2013 Ingersoll Rand

Ingersoll Rand®