Form P6587
03963832
Edition 9
July 2010

Air Chain Hoist

HLK Series

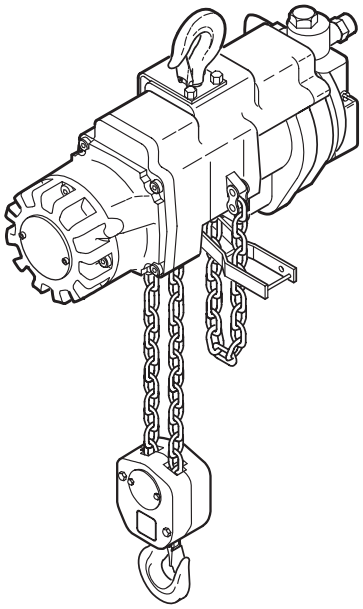

Operation and Maintenance Manual

Save these Instructions

Ingersoll Rand

SAFETY INFORMATION

This manual provides important information for all personnel involved with the safe installation, operation and proper maintenance of this product. Even if you feel you are familiar with this or similar equipment, you should read this manual before operating the balancer.

■ Danger, Warning, Caution and Notice

Throughout this manual there are steps and procedures which, if not followed, may result in an injury. The following signal words are used to identify the level of potential hazard.

⚠ DANGER	Indicates an imminently hazardous situation which, if not avoided, will result in death or serious injury.
⚠ WARNING	Indicates a potentially hazardous situation which, if not avoided, could result in death or serious injury.
⚠ CAUTION	Indicates a potentially hazardous situation which, if not avoided, may result in minor or moderate injury or property damage.
NOTICE	Indicates information or a company policy that relates directly or indirectly to the safety of personnel or protection of property.

■ Safety Summary

⚠ **WARNING**

- **Do not use this hoist or attached equipment for lifting, supporting, or transporting people or lifting or supporting loads over people.**
- **Powered hoists are designed to provide a 5 to 1 safety factor. The supporting structures and load-attaching devices used in conjunction with this hoist must provide adequate support to handle all hoist operations plus the weight of the hoist and attached equipment. This is the customer's responsibility. If in doubt, consult a registered structural engineer.**

NOTICE

- **Lifting equipment is subject to different regulations in each country. These regulations may not be specified in this manual.**

The National Safety Council, Accident Prevention Manual for Industrial Operations, Eighth Edition and other recognized safety sources make a common point: Employees who work near suspended loads or assist in hooking on or arranging a load should be instructed to keep out from under the load. From a safety standpoint, one factor is paramount: conduct all lifting operations in such a manner that if there were an equipment failure, no personnel would be injured. This means keep out from under a raised load and keep out of the line of force of any load.

Ingersoll Rand Material Handling hoists are manufactured in accordance with the latest ASME B30.16 standards.

The Occupational Safety and Health Act of 1970 generally places the burden of compliance with the owner/employer, not the manufacturer. Many OSHA requirements are not concerned or connected with the manufactured product but are, rather, associated with the final installation. It is the owner's and user's responsibility to determine the suitability of a product for any particular use. It is recommended that all applicable industry, trade association, federal, state, and local regulations be checked. Read all operating instructions and warnings before operation.

Rigging: It is the responsibility of the operator to exercise caution, use common sense and be familiar with proper rigging techniques. See ASME B30.9 for rigging information, American National Standards Institute, 1430 Broadway, New York, NY 10018.

This manual has been produced by **Ingersoll Rand** to provide dealers, mechanics, operators and company personnel with the information required to install, operate, maintain and repair the products described herein.

It is extremely important that mechanics and operators be familiar with the servicing procedures of these products, or like or similar products, and are physically capable of conducting the procedures. These personnel shall have a general working knowledge that includes:

1. Proper and safe use and application of mechanics common hands tools as well as special **Ingersoll Rand** or recommended tools.
2. Safety procedures, precautions and work habits established by accepted industry standards.

Ingersoll Rand cannot know of, or provide all the procedures by which product operations or repairs may be conducted and the hazards and/or results of each method. If operation or maintenance procedures not specifically recommended by the manufacturer are conducted, it must be ensured that product safety is not endangered by the actions taken. If unsure of an operation or maintenance procedure or step, personnel should place the product in a safe condition and contact supervisors and/or the factory for technical assistance.

SAFE OPERATING INSTRUCTIONS

The following warnings and operating instructions have been adapted in part from American National (Safety) Standards and are intended to avoid unsafe operating practices which might lead to injury or property damage.

Ingersoll Rand recognizes that most companies who use hoists have a safety program in force in their plants. In the event you are aware that some conflict exists between a rule set forth in this publication and a similar rule already set by an individual company, the more stringent of the two should take precedence.

Safe Operating Instructions are provided to make an operator aware of dangerous practices to avoid and are not necessarily limited to the following list. Refer to specific sections in the manual for additional safety information.

1. Only allow personnel instructed in safety and operation on this product to operate and maintain the hoist.
2. Only operate a hoist if you are physically fit to do so.
3. When a **"DO NOT OPERATE"** sign is placed on the hoist controls, do not operate the hoist until the sign has been removed by designated personnel.
4. Read the manufacturer's operating instructions before operating the hoist.
5. Never lift a load greater than the rated capacity of the hoist (unless for test purposes).
6. Never use the load chain as a sling.
7. Never operate the hoist with twisted, kinked, "capsized" or damaged chain.
8. Be certain the load is properly seated in the saddle of the hook.
9. Do not use load chain as a ground for welding. Do not attach a welding electrode to a hoist or sling chain.
10. Do not use the up and down stops as a means of stopping a hoist. The up and down stops are emergency devices only.
11. Do not leave a load suspended for extended periods.
12. Always stand clear of the load path.
13. Never use the hoist for lifting or lowering people, and never stand on a suspended load.
14. Never carry loads over people.
15. Before each shift, check the hoist for wear or damage. Check brakes, limit stops, etc.
16. Periodically, inspect the hoist thoroughly and replace worn or damaged parts.
17. Follow the lubrication instructions.
18. Do not attempt to repair load chain or hooks. Replace them when they become worn or damaged.
19. Never operate a hoist when the load chain is not centered under the hook. Do not "side pull" or "yard".
20. Always rig the hoist properly and carefully.
21. Ease the slack out of the load chain when starting a lift. Do not jerk the hoist load.
22. Keep the load chain clean and well lubricated. Do not drag the load chain or hook on the floor.
23. Be certain there are no objects in the way of a moving load.
24. Be certain the air supply is shut off before performing maintenance on the hoist.
25. Do not swing a suspended load.
26. Keep the load block overhead when not in use.
27. After use, or when in a non-operational mode, the winch should be secured against unauthorized and unwarranted use.
28. Avoid collision or bumping of hoists.
29. Pay attention to the load at all times when operating a hoist.
30. Never splice a hoist chain by inserting a bolt between links or by any other means.
31. Do not force a chain or hook into place by hammering, and never insert the point of the hook into a chain link.
32. Do not allow the chain to be exposed to extremely cold weather. Do not apply loads to a cold chain.

WARNING TAG AND LABEL

Each hoist is supplied from the factory with the warning tags and labels shown. If the tags or labels are not attached to your hoist, order new tags or labels and install. See parts list in parts section. Read and obey all warnings and other safety information attached to this hoist. Tags and labels are not shown actual size.

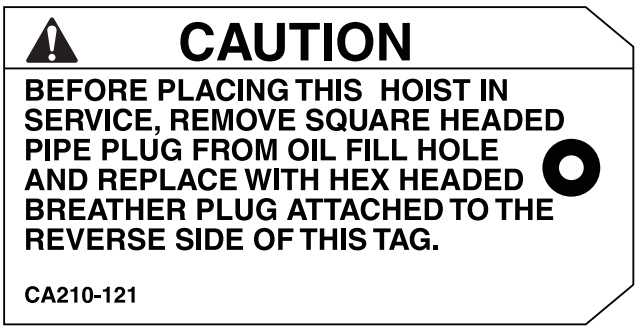

⚠ WARNING

Failure to follow these warnings may result in death, severe injury or property damage:

- **Do not operate this hoist before reading operation and maintenance manual.**
- **Do not lift people or loads over people.**
- **Do not lift more than rated load.**
- **Do not operate unless load is centered under hoist.**
- **Do not operate with twisted, kinked or damaged chain or wire rope.**
- **Do not operate a damaged or malfunctioning hoist.**
- **Do not remove or obscure warning labels.**
- **Do not operate a wire rope hoist when rope is not properly seated in its groove.**

Read the latest edition of ASME/ANSI B30.16 and National Electric Code (ANSI/NFPA 70). Comply with other federal, state and local rules.

P/N 71059612/B
for air and electric chain and wire rope hoists

INGERSOLL-RAND
MATERIAL HANDLING

SPECIFICATIONS

Table 1

Hoist Model No.	Rated Capacity	No. Chain Falls	Speed with Rated Load				Speed with Half Load				Speed with No Load				Hoist Weight*	
			fpm		m/m		fpm		m/m		fpm		m/m			
	(kg)		up	down	up	down	up	down	up	down	up	down	up	down	lb	kgs
HL1000K	1000	1	26	37	7.9	11.3	31	30	9.4	9.1	40	26	12.2	7.9	84	38.1
HL1000KR																
HL1500K	1500		16	26	4.9	7.9	22	22	6.7	6.7	28	16	8.5	4.9		
HL2000K	2000	2	13	18	4.0	5.5	15	15	4.6	4.6	20	13	6.1	4.0	125	56.6
HL3000K	3000		8	13	2.4	4.0	11	11	3.4	3.4	14	8	4.3	2.4	129	58.5
HL4500K	4500	3	4.6	10	1.4	3.0	7.5	8.4	2.3	2.6	10.5	6.6	3.2	2.0	193	87.5
HL6000K	6000	4	3.5	7.6	1.0	2.3	5.8	6.2	1.8	1.9	8.4	4.8	2.6	1.5	248	112.5

Notes:

* Based on hook mounted hoist with standard 10 ft (3 m) lift and one motor pendant control.

** Performance figures based on 70 SCFM (1.96 cu m/min) at 90 psig (6.3 bar/630 kPa) air supply at hoist inlet. Pendant control models use approximately 4 SCFM (0.11 cu m/min) more air.

Model Code Explanation

Example: HL1000K-2C10-C6S — **H L 1000K - 2 C 10 - C 6 S**

Series: = H

Chain Type:

L = Link

Base Model:

1000K	=	**1000 kg 1 metric ton (2,200 lbs)**
1000KR	=	1000 kg 1 metric ton (2,200 lbs) Spark Resistant
1500K	=	1500 kg 1-1/2 metric tons (3,300 lbs)
2000K	=	2000 kg 2 metric tons (4,400 lbs)
3000K	=	3000 kg 3 metric tons (6,600 lbs)
4500K	=	4500 kg 4-1/2 metric tons (10,000 lbs)
6000K	=	6000 kg 6 metric tons (13,200 lbs)

Control:

0	=	No control provided
1	=	Pull Chain
2	=	**Single Motor Pendant**
3	=	Two Motor Pendant
4	=	Three Motor Pendant

Suspension (1):

A	=	Fixed Lug
B	=	Bullard Hook (self closing)
C	=	**Swivel Steel Snap Hook**
R	=	Bronze Snap Hook
DA	=	Plain Rigid Trolley (universal wheels “A” flange)
DD	=	Plain Rigid Trolley (universal wheels “D” flange)
FXXA (2)	=	Hand Geared Trolley (universal wheels “A” flange)
FXXD (2)	=	Hand Geared Trolley (universal wheels “D” flange)
HA	=	Vane Motor Powered Trolley (universal wheels “A” flange)
HD	=	Vane Motor Powered Trolley (universal wheels “D” flange)

Length of Lift:

10	=	**10 feet (3 metres) Standard**
XX	=	Specify Length

Lower Hook:

B	=	Bullard Hook (self closing)
C	=	**Steel Snap Hook**
R	=	Bronze Snap Hook

Length of Pull Chain or Pendant Control Hose Drop: *

6	=	**6 feet (1.8 metres) Standard**
XX	=	Specify Length (in feet)

Options:

M	=	Manual Release Brake Kit
P	=	Piped Away Exhaust
S	=	**Steel Chain Container**
U	=	Fabric Chain Container

Notes:

(1) XX = Specify length of hand chain required. Example: "08" = 8 feet, standard.
(2) Order hose lengths in feet. Metric sizes listed for reference only.

Prior to installing the hoist, carefully inspect it for possible shipping damage.
Hoists are supplied fully lubricated from the factory. Lubrication of the load chain is recommended before initial hoist operation.

CAUTION

- **Owners and users are advised to examine specific, local or other regulations, including American National Standards Institute and/or OSHA Regulations which may apply to a particular type of use of this product before installing or putting hoist to use.**

WARNING

- **A falling load can cause injury or death. Before installing, read "SAFETY INFORMATION".**
- **The supporting structures and load-attaching devices used in conjunction with this hoist must provide adequate support to handle all hoist operations plus the weight of the hoist and attached equipment. This is the customer's responsibility. If in doubt, consult a registered structural engineer.**

Hoist Checks

Make certain your hoist is properly installed. A little extra time and effort in so doing can contribute toward preventing accidents and helping you get the best service possible. Always make certain the supporting member from which the hoist is suspended is strong enough to support the weight of the hoist plus the weight of a maximum rated load plus a liberal safety factor.

CAUTION

- **Before placing this hoist in service, remove square headed pipe plug from oil fill hole and replace with hex headed breather plug attached to caution tag CA210-121.**

1. Remove the solid shipping plug located on top of the hoist and install the attached breather plug prior to using the hoist.
2. With the hoist placed in its normal level position check that the gear case oil level is at the check plug on the side of the gear box.

Hoist Mounting

Hook Mounted Hoist Installation

Place hook over mounting structure. Ensure hook is large enough to properly fit on structure. Make sure hook latch is engaged.
Ensure the supporting member rests completely within the saddle of the hook and is centered directly above the hook shank. Hoist must freely hang from hook without restriction.

CAUTION

- **The supporting member must position on the saddle of the hook. Ensure hoist does not tilt to one side or the other.**

Trolley Mounted Hoist Installation

Refer to Dwg. MHP0866.
When installing a trolley on a beam, measure the beam flange and temporarily install the trolley on the hoist to determine the exact distribution and arrangement of the spacers. The total distance between the wheel flanges should be 3/16 to 1/4 inch (5 to 6 mm) greater than the width of the beam flange. The number of spacers between the trolley side plate and the mounting lug on the hoist must be the same in all four locations in order to keep the hoist centered under the I-beam. The remaining spacers must be equally distributed on the outside of the trolley side plates.

NOTICE

- **For specific information relating to trolley installation refer to the manufacturers' manual supplied with the trolley.**

HLK Hoist Plain Rigid Trolley

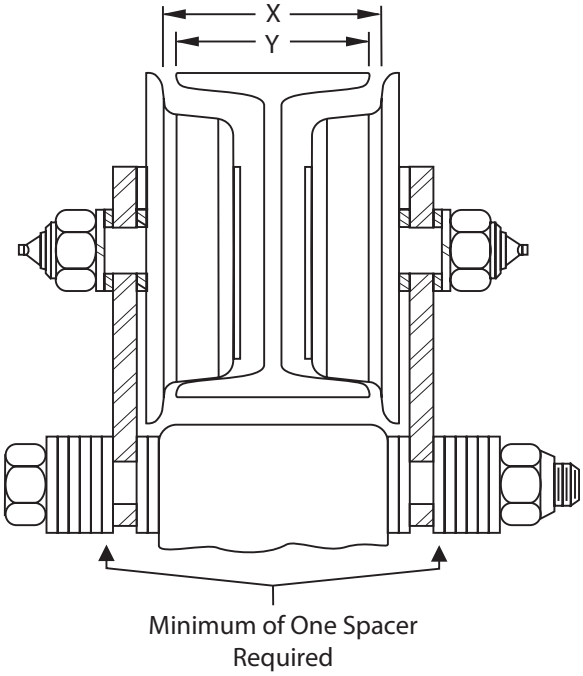

(Dwg. MHP0866)
Note: Ensure X-Y=3/16 to 1/4 inch (5 to 6 mm)

WARNING

- **A minimum of one adjusting spacer must be placed on the outside of the trolley side plates. Ensure correct installation as described in the parts, operation and maintenance manual provided with the trolley.**

Trolley bolt nuts (207) and (220) torque requirements:
On HL1000K, HL1500K, HL2000K and HL3000K hoists torque to 150 ft lbs (203 Nm).
On HL4500K and HL6000K hoists torque to 250 ft lbs (339 Nm).

When installing the hoist and trolley on the beam, make certain the side plates are parallel and vertical. After installation, operate the trolley over the entire length of the beam with rated load suspended 4 to 6 inches (100 to 150 mm) off the floor.

CAUTION

- **To avoid an unbalanced load which may damage the trolley, the hoist must be centered under the trolley.**

NOTICE

- **Trolley wheels ride on the top of the lower flange of the beam.**

Ensure beam stops are installed prior to operating hoist and trolley.

Chain Container

Refer to Dwgs. TPC451-3 and MHP1029 and the "MAINTENANCE" section for detailed assembly and disassembly information.

NOTICE

- **Make certain to adjust the container support such that the chain container does not contact the load chain or hook.**
- **Operate the hoist to naturally pile chain into the chain container. Piling the chain carelessly into the container by hand may lead to kinking or twisting that may cause chain to jam the hoist.**

1. Check the chain container size to make sure the length of load chain is within the capacity of the chain container. Replace with a larger chain container, if required.
2. Attach the chain container to the hoist.
3. Run bottom block to lowest point and run hoist in up direction to feed the chain back into the container.

WARNING

- **Disconnect the hoist from the air supply before installing a chain container kit.**

Air System

The supply air must be clean, lubricated and free from water or moisture. A minimum air supply of 70 scfm (1.96 cu. m/m) at 90 psig (6.3 bar/630 kPa) at the hoist motor inlet is required, during operation to provide rated hoist performance.

Air Lines

The inside diameter of the hoist air supply lines must not be smaller than 1/2 in (13 mm) for up to 12 ft (4 m) lengths and 3/4 in (19 mm) for up to 50 ft (15 m) lengths between the air supply and the hoist. Contact the factory for recommended air line sizes for distances greater than 50 ft (15 m). Before making final connections, all air supply lines should be purged with clean, moisture free air before connecting to unit inlet. Supply lines should be as short and straight as installation conditions will permit. Long transmission lines and excessive use of fittings, elbows, tees, globe valves, etc. cause a reduction in pressure due to restrictions and surface friction in the lines. Fittings used at the inlet of the hoist must have at least a 3/8 in (10 mm) air passage. Use of smaller fittings will reduce performance.

NOTICE

- **Always use an air line filter and lubricator with an HLK hoist.**

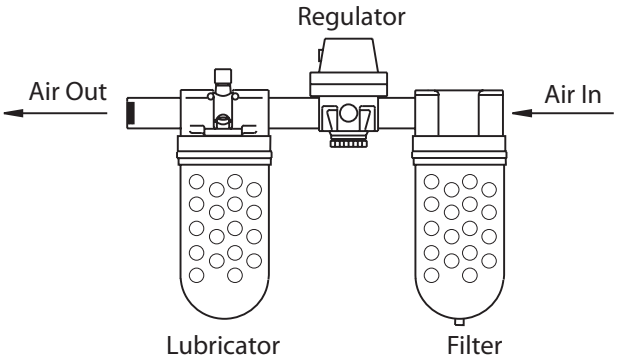

(Dwg. MHP0191)

Air Line Lubricator

Refer to Dwg. MHP0191.
Always use an air line lubricator with these hoists. Use a lubricator having an inlet and outlet at least as large as the inlet on the hoist motor. Install the air line lubricator as close to the air inlet on the hoist motor as possible. Refer to "ACCESSORIES" in the parts section for the recommended Filter-Lubricator-Regulator.

CAUTION

- **Lubricator must be located no more than 10 ft (3 metres) from the hoist motor.**
- **Shut off air supply before filling air line lubricator.**

The air line lubricator should be replenished daily and set to provide lubrication at a minimum rate of 1 to 3 drops per minute adjusted at maximum hoist speed, of SAE 10W oil or a good grade of hydraulic oil.

CAUTION

- **Do not use automotive type detergent oil. Detergents will delaminate the motor vanes and cause premature failure.**

Air Line Filter

Refer to Dwg. MHP0191
It is recommended that an air line strainer/filter be installed as close as practical to the motor air inlet port to prevent dirt from entering the motor. The strainer/filter should provide 10 micron filtration and include a moisture trap. Clean the strainer/filter monthly to maintain its operating efficiency. Refer to "ACCESSORIES" in the parts section for the recommended Filter-Lubricator-Regulator.

Moisture in Air Lines

Moisture that reaches the air motor through the supply lines is the chief factor in determining the length of time between service overhauls. Moisture traps can help to eliminate moisture. Other methods, such as an air receiver which collects moisture before it reaches the motor or, an aftercooler at the compressor that cools the air prior to distribution through the supply lines, are also helpful.

The swivel inlet assembly (includes items 23 through 24C) must be installed on the hoist. Failure to do so may result in a hoist malfunction.

Pendant Control Adjustments

The bleed adjustment screws (19) or (336 [old style]) used on hoists with a pendant control are factory adjusted to provide optimum control at 90 psig (6.3 bar/630 kPa) air pressure. If the hoist is used with other air supply pressures, the bleed adjustment screws may require readjustment.

Adjustment Bleed Screw location
(New Style valve chest shown.)

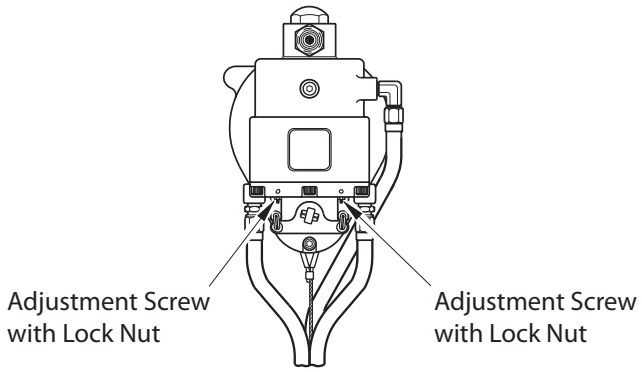

(Dwg. MHP1225)

For maximum performance and control, adjust the bleed screws (19) or (336 [old style]) as follows:

1. Loosen the adjustment screw locknut (21) or (337 [old style]).
2. Turn the adjustment screw (19) or (336 [old style]) counterclockwise approximately one third (1/3) of a turn.
3. Fully depress the pendant throttle lever (165) and hold in depressed position. Turn the adjustment screw clockwise until the piston rod fully retracts. This adjustment will provide a good balance of spotting control and maximum hoist speed. If better spotting control is desired, slowly back out the adjustment screw a little at a time until the spotting control is suitable.
4. When adjustment is complete, hold the adjustment screw in position and tighten the adjustment screw locknut (21) or (337 [old style]).
5. Repeat steps 1 through 4 for opposite pendant throttle lever.

Storing the Hoist

1. Always store the hoist in a no load condition.
2. Wipe off all dirt and water.
3. Oil the load chain, hook pins and hook latch.
4. Place in a dry location.
5. Plug hoist air inlet port.
6. Before returning hoist to service follow instructions for 'Hoists not in Regular Service' in the "INSPECTION" section.

OPERATION

The four most important aspects of hoist operation are:

1. Follow all safety instructions when operating hoist.
2. Allow only people instructed in safety and operation on this product to operate hoist.
3. Subject each hoist to a regular inspection and maintenance procedure.
4. Be aware of the hoist capacity and weight of load at all times.

WARNING

- **Do not use this hoist for lifting, supporting or transporting people or lifting or supporting loads over people.**

Operators must be physically competent. Operators should have no health condition which might affect their ability to react, and they must have good hearing, vision and depth perception. The hoist operator must be carefully instructed in his duties and must understand the operation of the hoist, including a study of the manufacturer's literature. The operator must be aware of proper methods of hitching loads and should have a good attitude regarding safety. It is the operator's responsibility to refuse to operate the hoist under unsafe conditions.

Initial Operating Checks

Hoists are tested for proper operation prior to leaving the factory. Before the hoist is placed into service the following initial operating checks should be performed.

1. After installation of trolley mounted hoists, check to ensure the hoist is centered below the trolley.
2. Check for air leaks in the supply hose and fittings to pendant, and from pendant to manifold.
3. When first running the hoist or trolley motors a small amount of light oil should be injected into the inlet connection to allow good lubrication.
4. When first operating the hoist and trolley it is recommended that the motors be driven slowly in both directions for a few minutes.
5. Operate the trolley along the entire length of the beam.
6. Inspect hoist and trolley performance when raising, moving and lowering test load(s). Hoist and trolley must operate smoothly and at rated specifications prior to being placed in service.
7. Check that trolley (if equipped) and hook movement is the same direction as arrows or information on the pendant control.
8. Raise and lower a light load to check operation of the hoist brake.
9. Check hoist operation by raising and lowering a load equal to the rated capacity of the hoist 4 to 6 inches (100 to 150 mm) off the floor.
10. Check operation of limit devices.
11. Check to see that the hoist is directly over the load. Do not lift the load at an angle (side pull or "yard").
12. Check to see that the hoist is securely connected to the overhead crane, monorail, trolley or supporting member.
13. Check to see that the load is securely inserted in the hook, and that the hook latch is engaged.

WARNING

- **The hook latch is intended to retain loose slings or devices under slack conditions. Hook latches are not intended to be an antifouling device, so caution must be used to prevent the latch from supporting any of the load.**

Hoist Controls

Pendant Controls

The HLK hoist can be supplied with an optional manual pull chain control or a one, two or three function pendant depending on application. For detailed information on these products refer to **Ingersoll Rand** Manual Form Number P6778 or contact your nearest distributor or the factory.

Operation of the hoist is the same for all pendants listed in this section:

1. To lift a load, depress the hoist pendant raise lever.
2. To lower a load depress the hoist pendant lower lever.
3. To throttle lift or lowering speed, regulate the amount the pendant lever is depressed. Depress lever completely for maximum speed; depress lever partially for slower speeds.
4. To stop lift or lowering function, release the lever. Lever will spring return to off and hoist motor will stop.

Single Function, Two Lever Pendant

Refer to Dwg. MHP0427.
The two lever pendant is the standard pendant supplied with the HLK and is designed to provide hoist operation only. Hoist operation must correspond to the directions indicated by the arrows located on the pendant levers.

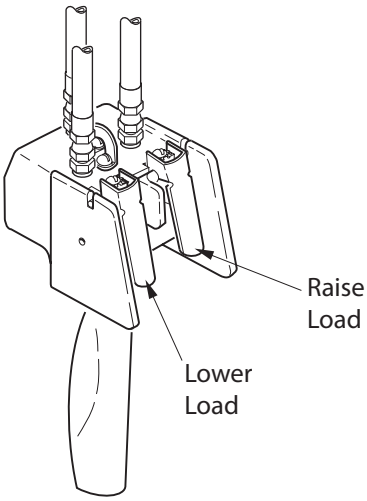

(Dwg. MHP0427)

Two Function, Four Lever Pendant

The four lever pendant is designed to provide a single station for control of hoist and trolley operations.
Refer to Dwg. MHP1008 for pendant lever function and hose to component connections.

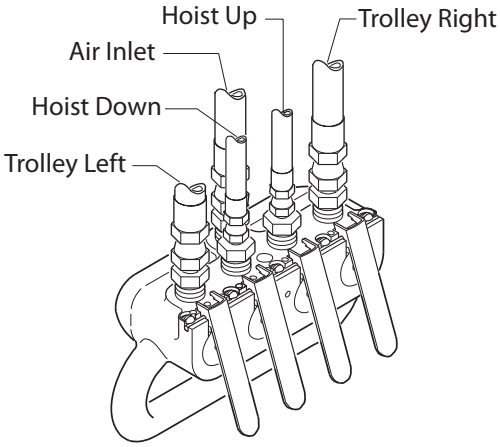

(Dwg. MHP1008)

Three Function, Six Lever Pendant

The six lever pendant is designed to provide a single station for control of hoist and trolley operations.
Refer to Dwg. MHP1009 for pendant lever function and hose to component connections.

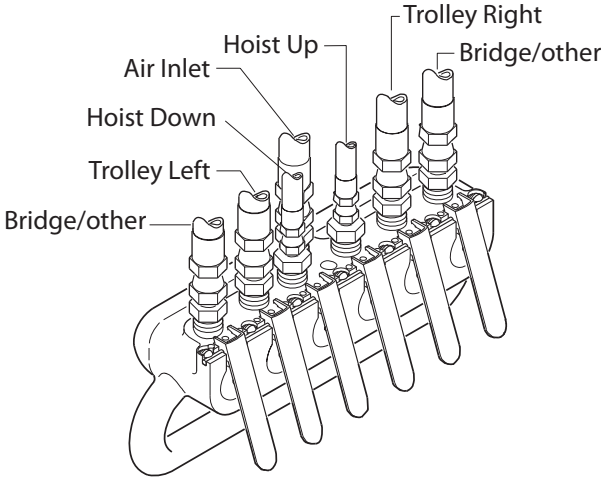

(Dwg. MHP1009)

Pull Chain Control

The pull chain provides the operator with a local hoist operating station. The following operating directions are as viewed from the motor end of hoist, facing the pull chains.

1. To lift a load pull down on the right pull chain.
2. To lower a load pull down on the left pull chain.
3. To throttle lift or lowering speed regulate the distance the pull chain travels. Pull chain to full travel for maximum speed; pull chain partially for slower speeds.
4. To stop lift or lowering of load, release the pull chain. Hoist motor will stop.

WARNING

- **All new, altered or modified equipment should be inspected and tested by personnel instructed in safety, operation and maintenance of this equipment to ensure safe operation at rated specifications before placing equipment in service.**
- **Never use a hoist that inspection indicates is damaged.**

Frequent and periodic inspections should be performed on equipment in regular service. Frequent inspections are visual examinations performed by operators or service personnel and include observations made during routine equipment operation. Periodic inspections are thorough inspections conducted by personnel trained in the safety, operation and maintenance of this equipment. ASME B30.16 states inspection intervals depend upon the nature of the critical components of the equipment and the severity of usage.
The inspection intervals recommended in this manual are based on intermittent operation of the hoist eight hours each day, five days per week, in an environment relatively free of dust, moisture and corrosive fumes. If the hoist is operated almost continuously or more than eight hours each day, more frequent inspections will be required.
Careful inspection on a regular basis will reveal potentially dangerous conditions while still in the early stages, allowing corrective action to be taken before the condition becomes dangerous.
Deficiencies revealed through inspection, or noted during operation, must be reported to designated personnel trained in safety, operation and maintenance of this equipment. A determination as to whether a condition constitutes a safety hazard must be decided, and the correction of noted safety hazards accomplished and documented by written report before placing the equipment in service.

Records and Reports

Inspection records, listing all points requiring periodic inspection should be maintained for all load bearing equipment. Written reports, based on severity of service, should be made on the condition of critical parts as a method of documenting periodic inspections. These reports should be dated, signed by the person who performed the inspection, and kept on file where they are readily available for review.

Load Chain Reports

Records should be maintained documenting the condition of load chain removed from service as part of a long-range load chain inspection program. Accurate records will establish a relationship between visual observations noted during frequent inspections and the actual condition of the load chain as determined by periodic inspection methods.

Frequent Inspection

On hoists in continuous service, frequent inspection should be made by operators at the beginning of each shift. In addition, visual inspections should be conducted during regular operation for any damage or evidence of malfunction (such as abnormal noises).

1. **OPERATION:** Check for visual signs or abnormal noises (grinding etc.) which could indicate a potential problem. Make sure controls function properly and return to neutral when released. Check load chain feed through the hoist and bottom block. If chain binds, jumps, is excessively noisy or "clicks", clean and lubricate the chain. If problem persists, replace the chain. Do not operate the hoist until all problems have been corrected.
2. **HOOKS:** Check for wear or damage, increased throat width, bent shank or twisting of hook. Replace hooks which exceed the throat opening and/or saddle dimension discard widths specified in Table 2 (refer to Dwg. MHP0040) or exceed a 10° twist (refer to Dwg. MHP0111). If the hook latch snaps past the tip of the hook, the hook is sprung and must be replaced. Replace Bullard Burnham hooks if the gate no longer contacts the hook tip. Refer to Dwg. MHP0662. Refer to the latest edition of ASME B30.10 "HOOKS" for additional information. Check hook support bearings for lubrication or damage. Ensure they swivel easily and smoothly.

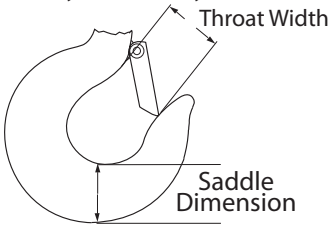

(Dwg.MHP0040)

Bullard Burnham Hook

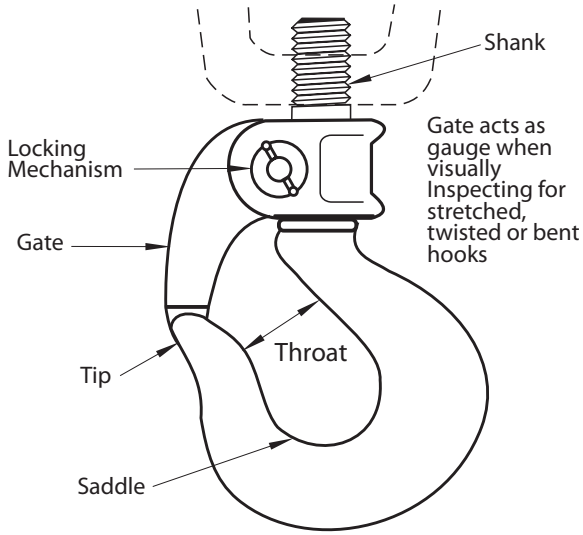

(Dwg.MHP0662)

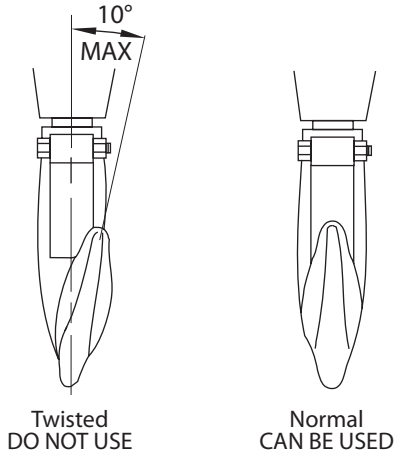

(Dwg.MHP0111)

3. **UPPER AND LOWER LIMIT DEVICE:** Test operation with no load slowly to both extremes of travel. Upward travel must stop when the bottom block or stop ring on chain hits hoist limit arm. Downward travel must stop when the loop at the unloaded end of the chain decreases and activates the limit arm.
4. **AIR SYSTEM:** Visually inspect all connections, fittings, hoses and components for indication of air leaks. Repair any leaks found. Check and clean the filter in the inlet stud (24) and the inlet strainer (24C) if equipped.
5. **CONTROLS:** During operation of hoist, verify response to pendant, or pull chain, is quick and smooth. Ensure that the controls return to neutral and hoist operation stops when released. If hoist responds slowly or movement is unsatisfactory, do not operate hoist until all problems have been corrected.
6. **HOOK LATCH:** Make sure the hook latch or gate is present and operating. Replace if necessary.

CAUTION

- **Do not use hoist if hook latch or gate is missing or damaged.**

7. **LOAD CHAIN:** Examine each link for bending, cracks in weld areas or shoulders, traverse nicks and gouges, weld splatter, corrosion pits, striation (minute parallel lines) and chain wear, including bearing surfaces between chain links (refer to Dwg. MHP0102). Replace a chain that fails any of the inspections. Check chain lubrication and lubricate if necessary. Refer to 'Load Chain' in "LUBRICATION" section.

CAUTION

- **The full extent of load chain wear cannot be determined by visual inspection. At any indication of load chain wear inspect chain and chain wheel in accordance with instructions in 'Load Chain' listed in "Periodic Inspection" section.**

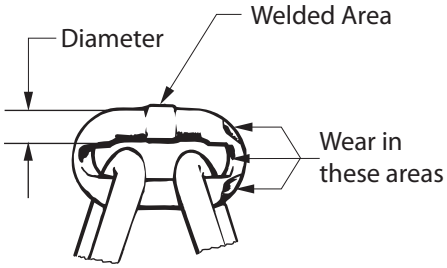

(Dwg. MHP0102)

8. **LOAD CHAIN REEVING:** Ensure welds on standing links are away from the powered chain wheel. Reinstall chain if necessary. On hoists with multiple chain falls, make sure load chain is not capsized, twisted or kinked. Adjust as required.

Periodic Inspection

Frequency of periodic inspection depends on the severity of

NORMAL	HEAVY	SEVERE
yearly	semiannually	quarterly

Disassembly may be required for HEAVY or SEVERE usage. Keep accumulative written records of periodic inspections to provide a basis for continuing evaluation.
Inspect all the items in "Frequent Inspection". Also inspect the following:

1. **FASTENERS:** Check all rivets, split pins, capscrews and nuts. Replace if missing or tighten if loose.
2. **ALL COMPONENTS:** Inspect for wear, damage, distortion, deformation and cleanliness. If external evidence indicates the need, disassemble. Check gears, shafts, bearings, sheaves, chain guides, springs and covers. Replace worn or damaged parts. Clean, lubricate and reassemble.
3. **HOOKS:** Inspect hooks carefully for cracks using magnetic particle or other suitable nondestructive method. Inspect hook retaining parts. Tighten or repair, if necessary.
4. **LOAD CHAIN WHEELS:** Check for damage or excessive wear. Replace if necessary. Observe the action of the load chain feeding through the hoist. Do not operate a hoist unless the load chain feeds through the hoist and hook block smoothly and without audible clicking or other evidence of binding or malfunctioning.
5. **MOTOR:** If performance is poor, disassemble the motor and check for wear or damage to bearings and shafts. The parts should be cleaned, lubricated and reassembled. Replace worn or damaged parts.
6. **BRAKE:** Raise a load equal to the rated capacity of the hoist 4 to 6 inches (100 to 150 mm) off the floor. Verify hoist holds the load without drift. If drift occurs, disassemble. Remove brake discs as described in the "MAINTENANCE" section. Check and clean the brake parts each time the hoist is disassembled. Replace the brake discs if the thickness is less than 0.090 inch (2.29 mm).
7. **SUPPORTING STRUCTURE:** Check for distortion, wear and continued ability to support load.
8. **TROLLEY** (if equipped): Check that the trolley wheels track the beam properly and clearance between each wheel flange and beam is correct, 3/32 to 1/8 in. (2 to 3 mm). Check that wheels and beam are not excessively worn. Inspect side plates for spreading due to bending. Do not operate the hoist until any problems have been determined and corrected.

Table 2

<table>
<tr><th rowspan="3">Hoist Model</th><th colspan="12">Throat Width (with Latch installed)</th></tr>
<tr><th colspan="4">Standard</th><th colspan="4">Bronze</th><th colspan="4">Bullard Burnham</th></tr>
<tr><th colspan="2">New Hook</th><th colspan="2">Discard Hook</th><th colspan="2">New Hook</th><th colspan="2">Discard Hook</th><th colspan="2">New Hook</th><th colspan="2">Discard Hook</th></tr>
<tr><th>in</th><th>mm</th><th>in</th><th>mm</th><th>in</th><th>mm</th><th>in</th><th>mm</th><th>in</th><th>mm</th><th>in</th><th>mm</th></tr>
<tr><td>HL1000K</td><td>1.06</td><td>26.9</td><td>1.14</td><td>29.0</td><td>1.06</td><td>26.9</td><td>1.14</td><td>29.0</td><td>1.37</td><td>34.8</td><td>1.48</td><td>37.6</td></tr>
<tr><td>HL1500K</td><td>1.06</td><td>26.9</td><td>1.14</td><td>29.0</td><td>1.06</td><td>26.9</td><td>1.14</td><td>29.0</td><td>1.37</td><td>34.8</td><td>1.48</td><td>37.6</td></tr>
<tr><td>HL2000K</td><td>1.10</td><td>27.9</td><td>1.19</td><td>30.2</td><td rowspan="2">1.50</td><td rowspan="2">38.1</td><td rowspan="2">1.62</td><td rowspan="2">41.1</td><td>1.50</td><td>38.1</td><td>1.62</td><td>41.1</td></tr>
<tr><td>HL3000K</td><td rowspan="2">1.50</td><td rowspan="2">38.1</td><td rowspan="2">1.62</td><td rowspan="2">41.1</td><td rowspan="2">1.87</td><td rowspan="2">47.5</td><td rowspan="2">2.02</td><td rowspan="2">51.3</td></tr>
<tr><td>HL4500K</td><td>1.75</td><td>44.5</td><td>1.89</td><td>48.0</td></tr>
<tr><td>HL6000K</td><td>1.75</td><td>44.5</td><td>1.89</td><td>48.0</td><td>2.75</td><td>69.9</td><td>2.97</td><td>75.4</td><td>3.00</td><td>76.2</td><td>3.24</td><td>82.3</td></tr>
</table>

9. **LABELS AND TAGS:** Check for presence and legibility. Replace if necessary.
10. **LOAD CHAIN END ANCHORS:** Ensure both ends of load chain are securely attached. Secure if loose, repair if damaged, replace if missing.
11. **LOAD CHAIN:** Measure the load chain for wear over a five link section as shown in Dwg. MHP1291. Pay particular attention to the most frequently reeved links. When any five links in the working length reaches or exceeds the discard length shown in Table 3, replace the entire chain. Always use a genuine **Ingersoll Rand** Material Handling replacement chain.

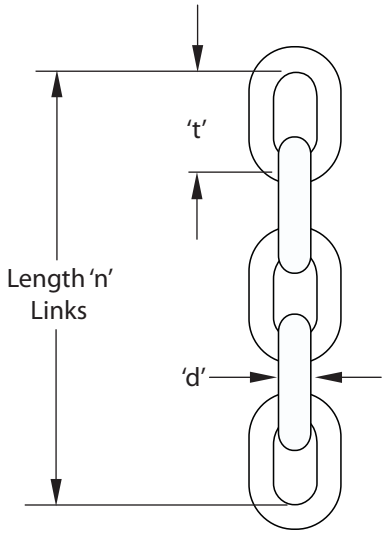

(Dwg. MHP1219)

Table 3 Load Chain Length

Dimensions Of Link		Number Of Links (n)	Discard Length (n) Links
Nominal Wire Diameter (d)	Pitch (t)		
3/8	1.012 in	5	5.161 in
	25.7 mm		131.1 mm

Zinc plated load chain is standard on HLK hoists built after January 1996. Always use stainless steel load chain on HL1000KR Spark Resistant Hoists.

12. **CHAIN CONTAINER:** Check for damage or excessive wear and that chain container is securely attached to the hoist. Secure or replace if necessary.
13. **LIMIT ASSEMBLY:** Check throttle lever moves freely. To limit hook downward travel the loop in the slack chain side must contact the throttle lever. To limit hook upward travel the bottom hook block, or stop ring, must contact the throttle lever.

To test "UP" and "DOWN" travel limits first run hoist slowly with no load to verify proper function. Repeat test at full speed with no load to verify proper function. On Hoist Models HL4500K and HL6000K the throttle lever (35) may require minor adjustment to provide adequate clearance with the upper suspension block.

Hoists Not in Regular Use

1. A hoist which has been idle for a period of one month or more, but less than one year, should be given an inspection conforming with the requirements of "Frequent Inspection" prior to being placed into service.
2. A hoist which has been idle for a period of more than one year should be given an inspection conforming with the requirements of "Periodic Inspection" prior to being placed into service.
3. Standby hoists should be inspected at least semiannually in accordance with the requirements of "Frequent Inspection". In abnormal operating conditions hoists should be inspected at shorter intervals.

INSPECTION AND MAINTENANCE REPORT
Ingersoll Rand HLK Air Chain Hoist

Model Number:	Date:
Serial Number:	Inspected by:
Reason for Inspection: (Check Applicable Box)	Operating Environment:
☐ 1. Scheduled Periodic Inspection: ____ Quarterly ____Semiannually ____Yearly	_____ Normal _____ Heavy _____ Severe
☐ 2. Discrepancy(ies) noted during Frequent Inspection	
☐ 3. Discrepancy(ies) noted during maintenance	
☐ 4. Other: _____	

Refer to the Parts, Operation and Maintenance Manual "INSPECTION" section for general inspection criteria. Refer to appropriate National Standards and Codes of practice. If in doubt about an existing condition contact the nearest Ingersoll-Rand Distributor or the factory for technical assistance.

COMPONENT	CONDITION		CORRECTIVE ACTION		NOTES
	Pass	Fail	Repair	Replace	
Fasteners					
Gears					
Shafts					
Bearings			- - -		
Load Bearing Sheaves					
Chain Guides					
Springs			- - -		
Covers					
Hooks:					
Top: Actual Hook Throat Width: _____ inches / _____ mm (Refer to Table 2 for minimum/maximum acceptable widths.)					
Top: Hook Twist			- - -		(maximum 10%)
Top: Hook Crack Test Method Used: _____ Dye Penetrant _____ Magnetic Particle _____ Other: _____					
Bottom: Actual Hook Throat Width: _____ inches / _____ mm (Refer to Table 2 for minimum/maximum acceptable widths.)					
Bottom: Hook Twist			- - -		(maximum 10%)
Bottom: Hook Crack Test Method Used: _____ Dye Penetrant _____ Magnetic Particle _____ Other: _____					
Hook Latch (Standard)			- - -		
Hook Gate (Bullard)			- - -		
Brakes (10% Load Test)			- - -		
Brakes (Visual Inspection)					
Tail Pin (End Anchor)					
Load Chain:			- - -		
Working length(s) maximum wear: _____ inches / _____ mm (Refer to Table 3)					
Supporting Structure					
Labels and Tags			- - -		
Other Components (list in NOTES section)					

Testing:	Pass	Fail	NOTES
Operational (No Load)			
Operational (10% Load)			
Operational (Maximum Test Load *)			

* Refer to the Parts, Operation, and Maintenance Manual 'Load Test' in the "MAINTENANCE" section to determine Maximum Test Load. This page may be photocopied and used by inspectors or maintenance personnel.

TROUBLESHOOTING

This section provides basic troubleshooting information. Specific causes to problems are best identified by thorough inspections performed by personnel instructed in safety, operation and maintenance of this equipment. The chart below provides a brief guide to common hoist symptoms, probable causes, and remedies.

SYMPTOM	CAUSE	REMEDY
Hoist will not operate.	No air supply to hoist, or too little flow or pressure.	Check air supply line connections and hoses. Check supply air at hoist motor inlet. A minimum of 70 scfm (1.96 cu. m/m) air flow at 90 psig (6.3 bar/630 kPa) at hoist motor inlet is required to provide rated performance.
	Hoist is overloaded.	Reduce load to within rated capacity.
	Motor is damaged.	Disassemble, inspect and replace parts. Refer to "MAINTENANCE" section.
	Pendant malfunction.	Check pendant throttle lever for free movement. Check air pressure at pendant. Minimum operating pressure in pendant line must be 55 psig (3.8 bar/380 kPa). Check lubricator oil level. Fill if low.
	Brake not releasing.	Check brake release circuit and pressure. Minimum operating pressure at brake inlet must be 55 psig (3.8 bar/380 kPa).
Load continues to move when hoist is stopped (UP direction).	Valve or throttle lever sticking.	Check pendant throttle lever for free movement. Lubricate or repair as required.
	Dump valves not releasing.	Check pendant hose dump valves.
	Pendant lever sticking.	Check pendant throttle lever for free movement.
Load continues to move when hoist is stopped (DOWN direction).	Dump valves not releasing.	Check pendant hose dump valves.
	Dump valves not releasing.	Check pendant hose dump valves.
	Hoist is overloaded.	Reduce load to within rated capacity.
	Valve or throttle lever sticking.	Check pendant throttle lever for free movement.
	Brake is slipping.	Check brake springs and brake disc linings for wear. Refer to "MAINTENANCE" section.
Hoist does not lift load.	No air supply to hoist, or too little flow or pressure.	Check air supply line connections and hoses. Check supply air at hoist motor inlet. A minimum of 70 scfm (1.96 cu. m/m) air flow at 90 psig (6.3 bar/630 kPa) at hoist motor inlet is required to provide rated performance.
	Hoist is overloaded.	Reduce load to within rated capacity.
	Main air travel is restricted.	Check throttle lever and linkage for free, unobstructed movement.
	Exhaust restricted.	Inspect vents and replace mufflers. Refer to "MAINTENANCE" section.
	Motor is damaged.	Disassemble, inspect and replace parts. Refer to "MAINTENANCE" section.
Reduced speed and/or capacity.	Inlet stud (24) screen plugged, restricting air flow.	Replace old style inlet stud with screen with new style (without screen), or remove screen.
	Lubricator oil level low.	Fill lubricator.
	No air supply to hoist, or too little flow or pressure.	Check air supply line connections and hoses. Check supply air at hoist motor inlet. A minimum of 70 scfm (1.96 cu. m/m) air flow at 90 psig (6.3 bar/630 kPa) at hoist motor inlet is required to provide rated performance. Check pendant control adjustment as described in the "INSTALLATION" section.
	Bleed screws out of adjustment.	Adjust bleed screws as described in 'Bleed Screw Adjustment' procedure in "INSTALLATION" section.
Hoist operates in LOWER direction but will not LIFT.	Hoist is overloaded.	Reduce load to within rated capacity.
	Pendant malfunction.	Check pendant throttle lever for free movement. Check air pressure at pendant. Minimum operating pressure in pendant line must be 55 psig (3.8 bar/380 kPa).
Hoist operates in LIFT direction but will not LOWER.	Brake piston seals leaking.	Install new seals. Refer to "MAINTENANCE" section.
	No air supply to hoist, or too little flow or pressure.	Check air supply line connections and hoses. Check supply air at hoist motor inlet. A minimum of 70 scfm (1.96 cu. m/m) air flow at 90 psig (6.3 bar/630 kPa) at hoist motor inlet is required to provide rated performance.
Load chain jumps on sheave or makes a "snapping" sound.	Dirty or lack of oil on load chain.	Clean and lubricate load chain. Refer to "LUBRICATION" section.
	Worn or rusted load chain.	Inspect load chain. Refer to "INSPECTION" section. Clean and lubricate load chain. Refer to "LUBRICATION" section.
	Worn load sheave or incorrectly reeved load chain.	Check load chain is correctly reeved. Disassemble, inspect and replace worn parts. Refer to "MAINTENANCE" section.
	Capsized hook.	Correct as described in "MAINTENANCE" section.
	Hoist not in-line with load.	Align hoist with load. Do not side pull or "yard".

LUBRICATION

To ensure continued satisfactory operation of the hoist, all points requiring lubrication must be serviced with the correct lubricant at the proper time interval as indicated for each assembly. Correct lubrication is one of the most important factors in maintaining efficient operation.

The lubrication intervals recommended in this manual are based on intermittent operation of the hoist eight hours each day, five days per week. If the hoist is operated almost continuously, or more than the eight hours each day, more frequent lubrication will be required. The lubricant types and change intervals are based on operation in an environment relatively free of dust, moisture, and corrosive fumes. Use only those lubricants recommended. Other lubricants may affect the performance of the hoist. Approval for the use of other lubricants must be obtained from your **Ingersoll Rand** Technical Support Department or distributor. Failure to provide proper lubrication may result in damage to the hoist and/or its associated components.

INTERVAL	LUBRICATION CHECKS
Start of each shift (Operator)	Check flow and level of air line lubricator (1 to 3 drops per minute) when operating hoist at maximum motor speed.
Weekly (Maintenance personnel)	Clean and lubricate load chain.
	Lubricate hook latch and pivot points.
Monthly (Maintenance personnel)	Inspect and clean or replace air line filter.
Yearly (Maintenance personnel)	Drain and replace housing oil.

Note: Intervals are based on hoist operation in a normal environment as described in the "INSPECTION" section. In HEAVY or SEVERE operating conditions adjust lubrication intervals accordingly.

General Lubrication

Whenever a Series HLK Hoist is disassembled for overhaul or replacement of parts, lubricate as follows:

1. Coat all motor parts with a light film of **Ingersoll Rand** Pneu-Lube® Medium Oil No. 50 or a good quality hydraulic oil before assembling.

CAUTION

- **Do not use automotive type detergent oil. Detergents will delaminate the motor vanes and cause premature failure.**

2. Apply a coating of **Ingersoll Rand** No. 70 Grease or multipurpose grease to the throttle shaft bearings (2) before assembly.
3. Fill the gear case to the level plug on the side of the housing (1) with **Ingersoll Rand** No. 62 oil, or Texaco Meropa No. 220. Replace oil level plug and vent plug after filling.
4. The top and bottom hooks are supported by thrust bearings. These bearings must be packed with **Ingersoll Rand** No. 68 grease or a standard No. 2 multipurpose grease at regular intervals. Neglect of proper lubrication will lead to bearing failure.

In Line Lubricator

Lubricate the motor with **Ingersoll Rand** Pneu-Lube® Medium Oil No. 10 (or SAE 10), or No. 50 (SAE 20 or 20W) nondetergent motor oil from an in-line lubricator. The use of detergent oil may cause premature failure.

Load Chain

WARNING

- **Failure to maintain clean and well lubricated load chain will result in rapid load chain wear that can lead to chain failure which can cause severe injury, death or substantial property damage.**

1. Lubricate each link of the load chain weekly. Apply new lubricant over existing layer.
2. In severe applications or corrosive environments, lubricate more frequently than normal.
3. Lubricate hook and hook latch pivot points with same lubricant used on the load chain.
4. If required, clean chain with acid free solvent to remove rust or abrasive dust buildup and lubricate the chain.
5. Use **Ingersoll Rand** LUBRI-LINK-GREEN® or a SAE 50 to 90 EP oil.

Hook and Suspension Assemblies

1. Lubricate the hook and hook latch pivot points. Hook and latch should swivel/pivot freely.
2. Use **Ingersoll Rand** LUBRI-LINK-GREEN® or a SAE 50 to 90 EP oil.
3. On HL4500K and HL6000K hoists lubricate the idler wheel bearings (107) in the upper suspension housing (101) and lower hook block (123) with **Ingersoll Rand** No. 68 Grease or a good quality No. 2 multipurpose grease.
4. On HL4500K and HL6000K hoists after each 300 hours of operation or more frequently if hoist is operating in a contaminated atmosphere, inject 2 or 3 shots of grease from a grease gun into grease fittings (111) in the end of the idler wheel shafts (110).

Housing

Remove the oil level plug from the side of the housing (1). If the oil level is below the tapped hole, remove the vent plug and add a sufficient amount of Ingersoll-Rand No. 62 oil (Texaco Meropa No. 3 or Texaco Meropa No. 220). Reinstall the oil level plug and vent plug.

Other System Components

Refer to the "LUBRICATION" section in the manufacturer's manual provided with the system component for lubrication requirements.

WARNING

- **Never perform maintenance on the hoist while it is supporting a load.**
- **Before performing maintenance, tag controls:**
  DANGER - DO NOT OPERATE
  EQUIPMENT BEING REPAIRED.
- **Only allow personnel instructed in service and repair of this hoist to perform maintenance.**
- **After performing any maintenance on the hoist, dynamically test hoist to 100% of its rated capacity, in accordance with ASME B30.16 standards, before returning hoist to service. Testing to more than 100% of rated capacity may be required to comply with standards and regulations set forth in areas outside of the USA.**
- **Shut off air system and depressurize air lines before performing any maintenance.**

Maintenance Intervals

The maintenance interval chart is based on intermittent operation of the hoist eight hours each day, five days per week, in an environment relatively free of dust, moisture and corrosive fumes. If the hoist is operated almost continuously or more than eight hours each day, more frequent maintenance should be performed.

INTERVAL	MAINTENANCE CHECKS
Start of each shift (Operator or Maintenance Personnel)	Make a thorough visual inspection of the hoist for damage. Do not operate the hoist if damaged.
	Opreate the Hoist in both directions. Hoist must operate smoothly without Sticking , binding or abnormal noises. Check the operation of Brake.
Semiannually (Maintenance Personnel)	Inspect the brake. Clean or replace parts as required. Adjust brake as necessary.
Yearly (Maintenance Personnel)	Inspect the hoist gearing, shafts and bearings for wear and damage. Repair or replace as necessary.
	Check all the supporting members, including the suspension, fasteners, nuts, sheaves and rigging, etc. for indications of damage or wear. Repair or replace as required.

General Maintenance Instructions

All maintenance work performed on the hoist must be recorded with the date in the inspection report.

Proper use, inspections and maintenance increase the life and usefulness of your **Ingersoll Rand** equipment. During assembly, lubricate gears, nuts, capscrews and all machined threads with applicable lubricants. Use of antiseize compound and/or thread lubricant on capscrew and nut threaded areas prevents corrosion and allows for ease of disassembly of components.

It is recommended that all maintenance work on the hoist be performed on a bench in a clean, dust free work area. During the process of disassembling the hoist, observe the following:

1. Turn off air system and depressurize air lines before performing any maintenance. Disconnect air line from hoist.
2. Never disassemble the hoist any further than is necessary to accomplish the needed repair. A good part can be damaged during the course of disassembly.
3. Never use excessive force when removing parts. Tapping gently around the perimeter of a cover or housing with a soft hammer, for example, is sufficient to break the seal.
4. Do not heat a part with a flame to free it for removal, unless the part being heated is already worn or damaged beyond repair and no additional damage will occur to other parts.

In general, the hoist is designed to permit easy disassembly and assembly. The use of heat or excessive force should not be necessary.

5. Keep the work area clean to prevent dirt and other foreign matter from getting into bearings and other moving parts.
6. All seals, gaskets and O-Rings should be discarded once they have been removed. New seals, gaskets and O-Rings should be used when assembling the hoist.
7. When grasping a part in a vise, always use leather or copper covered vise jaws to protect the surface of the part and help prevent distortion. This is particularly true of threaded members, machined surfaces and housings.
8. Do not remove any part which is press fit in or on a subassembly unless the removal of the part is necessary for repairs or replacement.
9. To avoid damaging bearings during hoist assembly or disassembly always tap or press on the bearing inner race for shaft fit bearings or the outer race for bore fit bearings.
10. If repair work can only be conducted above body height, suitable working platforms or ladders should be made available.

Load Chain Care

Keep the chain well lubricated as instructed in the "LUBRICATION" section. Never operate a hoist when the load chain does not flow freely and smoothly into and out of the chain wheel(s), or when it makes noises indicative of binding or other malfunctions.

If the chain is visibly damaged replace the chain and examine the chain wheel and chain guard. Install a new chain wheel if the old one is visibly worn. Install a new guard if the old one is broken or distorted.

Refer to "INSPECTION" section for information on load chain inspection.

CAUTION

- **The full extent of load chain wear cannot be determined by visual inspection. At any indication of load chain wear inspect chain and chain wheel. Refer to "INSPECTION" section.**

The standard chain provided with this hoist is case hardened to a depth of 0.010 to 0.012 inch (0.25 to 0.35 mm). When the outer hardened case layer is worn through, additional wear will progress rapidly and the strength of the chain will be considerably reduced.

Additionally, the chain will no longer fit the pockets in the hoist chain wheel properly causing the chain wheel to wear rapidly. This will greatly increasing the chance of hoist malfunction and chain breakage.

The hoist chain wheel is designed to outlast several chain replacement cycles if the chain is replaced as recommended.

Initial Chain Installation

The following instructions apply to hoists that do not have load chain installed. For hoists with load chain installed, that must be replaced, refer to the 'Chain Replacement' section. When directed to remove or install hoist sections or subassemblies to assist in chain installation, refer to the applicable 'Disassembly' or 'Assembly' section for specific requirements.

HL1000K, HL1000KR and HL1500K

The following steps describe the initial installation of chain on single fall hoists that do not have load chain installed.

1. Remove the brake spring and piston housing, brake discs and brake plates to expose the brake driver.
2. From the side of the chain wheel opposite the chain anchor bolt, engage the first link of load chain in a pocket of the chain wheel on edge. Refer to Dwg. TPA706-4, 'Chain Installation - Step 1.' The weld on the load chain link must face away from the powered chain wheel.
   Refer to Dwg. MHP0472.
3. Rotate the brake driver by hand to feed the load chain through the hoist.

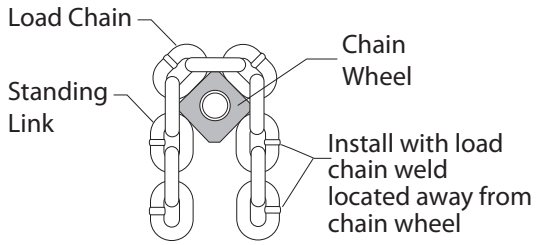

(Dwg. MHP0472)

Chain Installation - Step 1

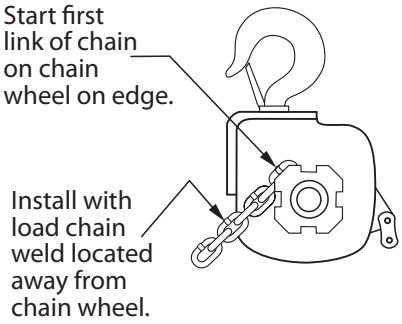

(Dwg. TPA706-4)

4. Keep the load chain straight and do not twist it. Attach the free end of the load chain to the connecting link. Refer to Dwg. TPA706-3, 'Chain Installation - Step 2.' Clean, inspect and install the brake spring, brake discs, brake plates and piston housing on hoist.

Chain Installation - Step 2

5. Attach free end of load chain to hook. Inspect chain while operating hoist slowly. Ensure chain feeds through chain wheel smoothly, without sticking or binding. Repeat operation in the opposite direction.

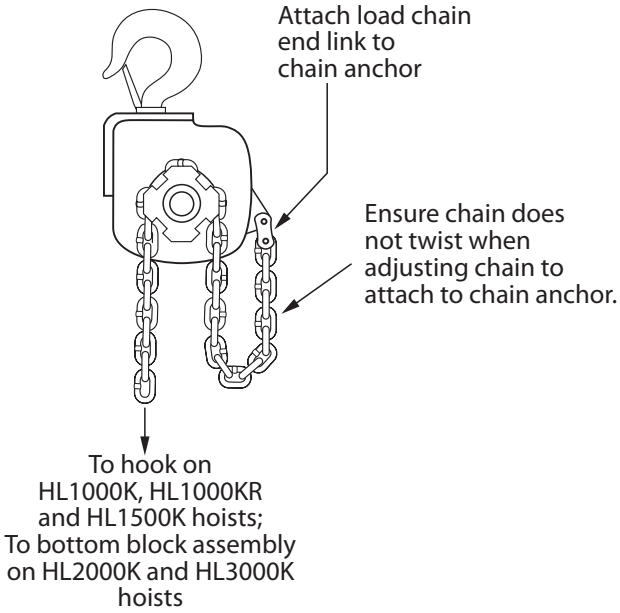

(Dwg. TPA706-3)

HL2000K and HL3000K

The following steps describe the initial installation of chain on double fall hoists that do not have load chain installed.

1. Complete steps 1 through 4 of "HL1000K, HL1000KR and HL1500K Chain Installation" section. Refer to MHP0472, TPA706-4, and TPA706-3.

WARNING

- **Replacement chain for an HLK double fall hoist must have an ODD number of total links. Refer to Dwg. MHP0441.**

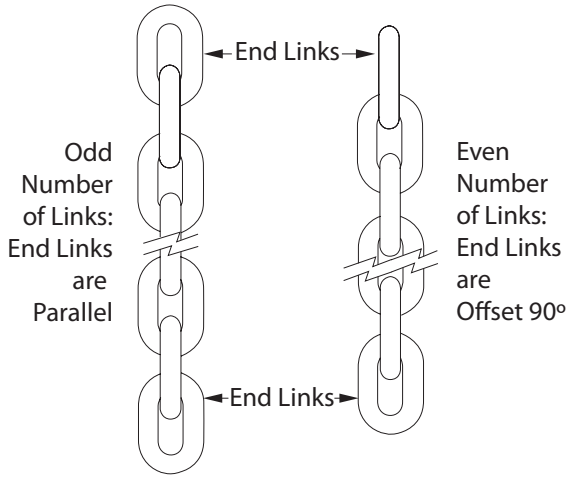

(Dwg. MHP0441)

2. Ensure the chain is straight and feed the end through the bottom hook chain wheel with the first link on edge with the weld to the inside of the idler chain wheel. Refer to Dwg. TPA706-2, 'Chain Installation - Step 3.'

Chain Installation - Step 3

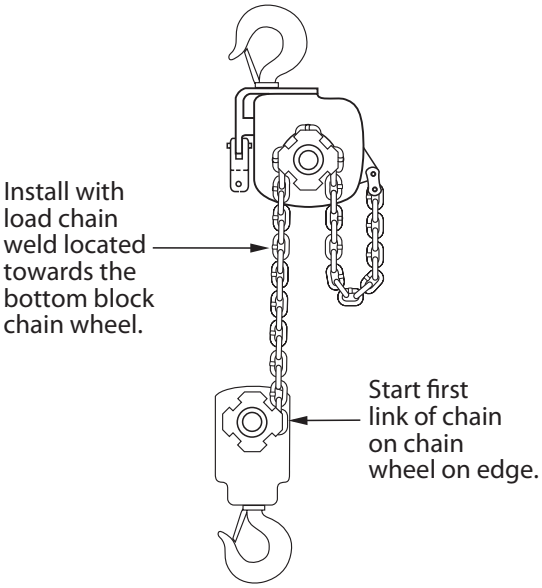

(Dwg. TPA706-2)

3. Ensure the chain is straight and attach the free end to the chain anchor bracket. Refer to Dwg. TPA706-1, 'Chain Installation - Step 4.'

Chain Installation - Step 4

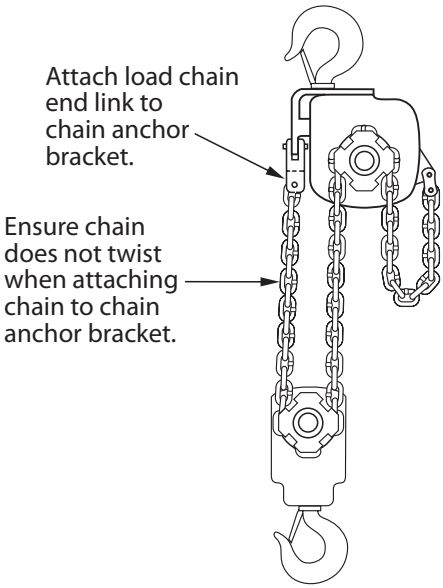

(Dwg. TPA706-1)

4. Inspect to ensure chain is not twisted, kinked or "capsized". Refer to Dwg. MHP0020 and MHP0043.

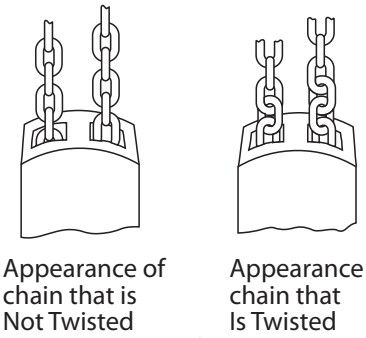

(Dwg. MHP0020)

Capsized Hook

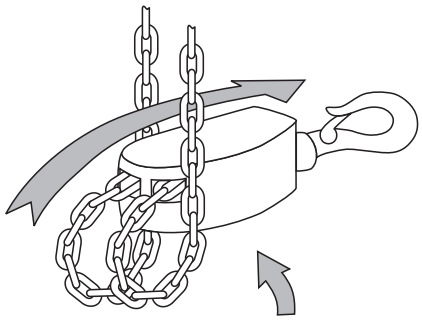

(Dwg. MHP0043)

HL4500K and HL6000K

The following steps describe the initial installation of chain on three or four fall hoists that do not have load chain installed.

1. Remove the brake spring and piston housing, brake discs and brake plates to expose the brake driver.
2. Place the edge of the first link of load chain in a pocket of the hoist powered chain wheel. Refer to Dwg. MHP0472. The weld on the load chain link must face away from the powered chain wheel pocket.

CAUTION

- **Improper installation of the load chain will cause premature wear of the chain wheels resulting in damaged equipment, which can cause injury or property damage.**

3. Rotate the brake driver by hand to feed the load chain through the hoist in the direction of the dead end chain anchor (raise direction).
4. Keep the load chain straight, do not twist it. Attach the free end of the load chain to the connecting link. Refer to Dwg. TPA1056 for HL4500K and Dwg. TPA1057 for HL6000K. Clean and inspect the brake parts and assemble.
5. On HL6000K hoists, slide the limit stop tube onto the load chain.
6. Keeping the load chain straight, complete the load chain installation as described in either the HL4500K or HL6000K 'Hoist Load Chain Reeving' section.

HL4500K Hoist Load Chain Reeving

Refer to Dwg. TPA1056.
After the load chain has been correctly installed onto the hoist powered chain wheel it must be carefully routed through the lower block idler chain wheel, the upper suspension idler chain wheel and secured to the bottom block housing as described in this section.

WARNING

- **Twisted load chain can jam as it passes over the chain wheel causing damage to the hoist or breaking the load chain which can cause injury or property damage.**

1. Raise the bottom hook block to a position near the hoist where it can be properly supported and restrained from movement.
2. Ensure the load chain remains straight. Feed load chain through bottom block idler chain wheel.

NOTICE

- **The load chain links that were standing links on the powered chain wheel are also standing links on the bottom block idler chain wheel.**

3. Ensure the load chain remains straight. Feed the chain through the upper suspension idler chain wheel.

NOTICE

- **The load chain links that were standing links on the powered chain wheel and bottom block chain wheel are flat links on the upper suspension idler chain wheel.**

HK4500K Hoist Chain Reeving

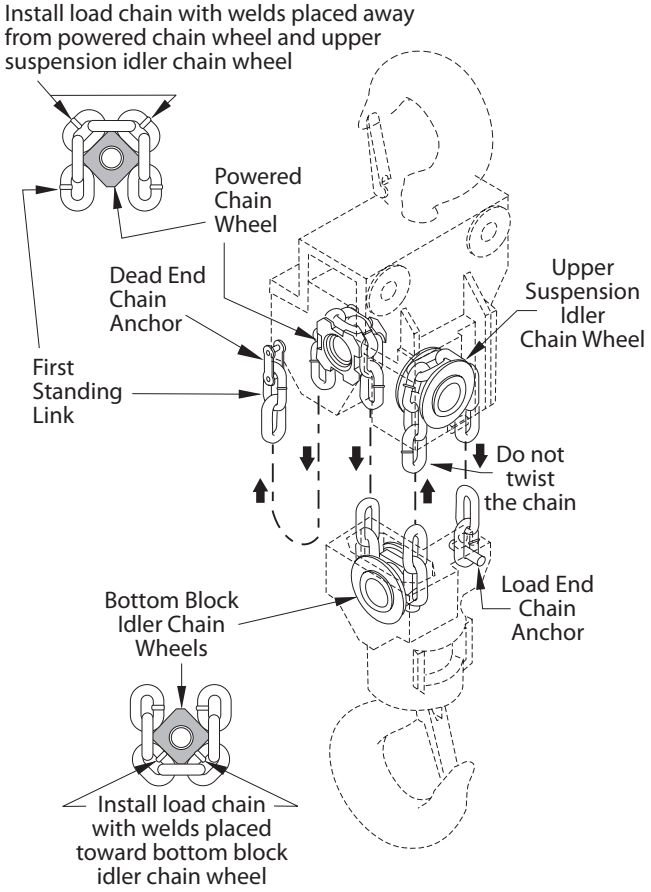

(Dwg. TPA1056)

4. Ensure the load chain remains straight. Feed the load chain through the upper suspension idler chain wheel and insert end link into bottom block load end chain anchor. Do not twist the load chain when attaching it to the load end chain anchor. If necessary cut the last link from the load chain (refer to Dwg. MHP0441) and remove it to prevent twisting. Secure in place using anchor pin.

NOTICE

- **The bottom block assembly may require adjustment to ensure it is level with an equal number of load chain links along the length of each load bearing fall. To level out the bottom block assembly feed the load chain through the bottom block and upper suspension idler chain wheels as necessary to 'balance' the bottom block assembly. Ensure the powered chain wheel does not turn during adjustment.**

5. Lubricate the load chain as described in the "LUBRICATION" section. Operate the hoist fully in both directions without a load attached. Hoist must operate smoothly without sticking, binding or chain 'jumping'. Test hoist completely as described in the in the 'Testing' section before returning to general service.

HL6000K Hoist Load Chain Reeving

Refer to Dwg. TPA1057.
After the load chain has been correctly installed onto the hoist powered chain wheel it must be carefully routed through the lower block idler chain wheel, the upper suspension idler chain wheel and secured to the housing as described in this section.

WARNING

- **Twisted load chain can jam as it passes over the chain wheel causing damage to the hoist or breaking the load chain which can cause injury or property damage.**

1. Raise the bottom hook block to a position near the hoist where it can be properly supported and restrained from movement.

HL6000K Hoist Chain Reeving

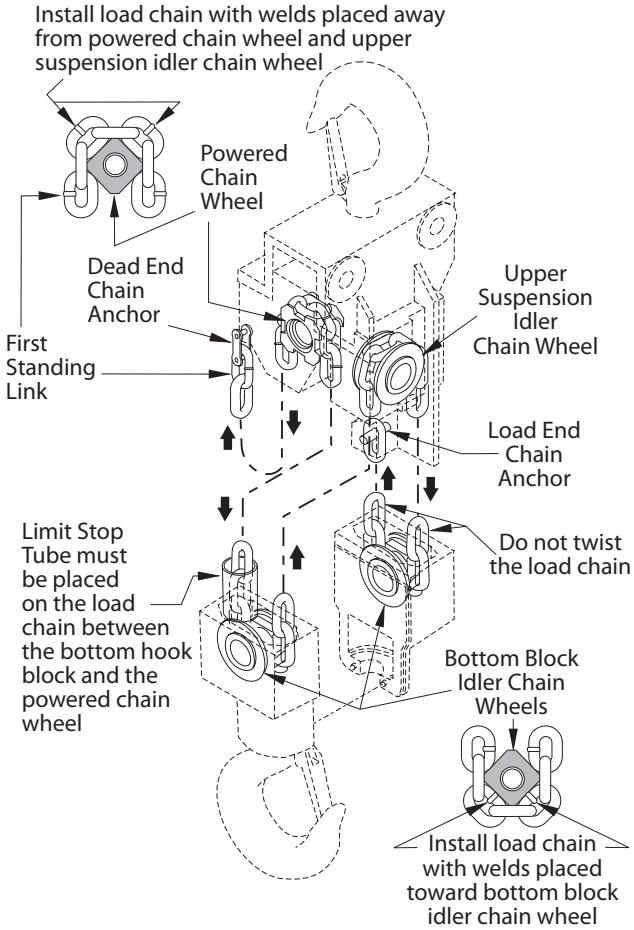

(Dwg. TPA1057)

2. Ensure the load chain remains straight. Place the limit stop tube on the load chain and feed load chain through bottom block idler chain wheel.

NOTICE

- **The load chain links that are standing links on the powered chain wheel must also be standing links on the bottom block idler chain wheel.**

3. Ensure the load chain remains straight. Feed the chain through the upper suspension idler chain wheel.

NOTICE

- **The load chain links that are standing links on the powered chain wheel and bottom block chain wheel must be flat links on the upper suspension chain wheel.**

4. Ensure the load chain remains straight. Feed the load chain through the second bottom block idler chain wheel. Insert end link into upper suspension load end chain anchor. Do not twist the load chain when attaching it to the load end chain anchor. If necessary cut the last link from the load chain (refer to Dwg. MHP0441) and remove it to prevent twisting. Secure in place using anchor pin.

NOTICE

- **The bottom block assembly may require adjustment to ensure it is level with an equal number of load chain links along the length of each load bearing fall. To level out the bottom block assembly feed the load chain through the bottom block and upper suspension idler chain wheels as necessary to 'balance' the bottom block assembly. Ensure the powered chain wheel does not turn during adjustment.**

5. Lubricate the load chain as described in the "LUBRICATION" section. Operate the hoist fully in both directions without a load attached. Hoist must operate smoothly without sticking, binding or chain 'jumping'. Test hoist completely as described in the 'Testing' section before returning to general service.

Chain Replacement

The following instructions describe the replacement of load chain on hoists with chain installed. If the load chain has been removed, it must be reinstalled or replaced as described in the 'Initial Chain Installation' section. When directed to remove or install hoist sections or subassemblies to assist in chain installation, refer to the applicable 'Disassembly' or 'Assembly' section for specific requirements.

CAUTION

- **Damaged load chain may cause chain wheel wear or damage and result in hoist failure, injury or property damage. Worn or damaged load chain must be removed, the hoist and bottom block assemblies disassembled and the powered and idler chain wheels inspected before continuing hoist operations.**
- **Do not attempt to replace load chain with hoist supporting a load. Remove all loads.**
- **The following procedures use powered hoist operations. Extreme care must be taken to ensure safe operating conditions exist to prevent injury and hoist or property damage when operating hoist.**

Load chain replacement for all hoist models can be accomplished efficiently and easily by using the existing load chain to install the new load chain.

1. Raise the hoist hook (HL1000K, HL1000KR, HL1500K) or hook block (HL2000K, HL3000K, HL4500K, HL6000K) to a position near the hoist where it can be properly supported and restrained from movement.

2. Disconnect the load chain load end link from either the hook (HL1000K, HL1000KR, HL1500K) or the load end chain anchor (HL2000K, HL3000K, HL4500K, HL6000K). On the HL2000K and HL3000K, remove the load chain from the bottom block.

3. Using an abrasive wheel, cut a section from the end link to form a 'C' link, as shown in Dwg. MHP0502.

CAUTION

- **Do not distort the link in any manner. It must be able to pass over the chain wheel(s) without binding.**

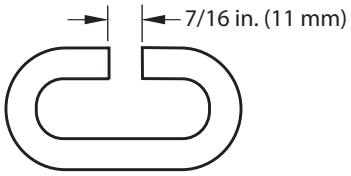

"C" Link

(Dwg. MHP0502)

4. Connect the new chain to the old chain by inserting the end of the new chain onto the 'C' link. Make certain the welds and links on the new chain match the positioning of the welds and links on the chain being replaced.
5. The following hoist specific instructions describe the steps that must be taken to complete the load chain replacement on your hoist.

HL1000K, HL1000KR and HL1500K Chain Replacement

Complete the initial steps described in 'Chain Replacement'. Conduct the following additional steps on single fall hoists to complete load chain replacement installation.

1. Slowly operate the hoist in the raise direction to run off the old chain and reeve the new chain over the chain wheel. Refer to Dwg. TPA706-4.

NOTICE

- **The first link of new chain over the powered chain wheel must be a standing link.**

2. After the new chain has been reeved over the powered chain wheel, remove the old chain and the 'C' link. Secure the dead end of the load chain to the dead end chain anchor located on the hoist. Refer to Dwg. TPA706-3. Make certain the load chain is not twisted between the chain wheel and dead end chain anchor.
3. Lubricate the load chain. Refer to "LUBRICATION" section.
4. Rotate the last link in the load chain such that it is perpendicular to the next link with the weld facing down, towards the hook. Refer to parts Dwg. MHP1105. Attach the hook to the load end of the load chain. Operate the hoist slowly in both directions. Hoist must operate smoothly, without sticking or binding.

HL2000K and HL3000K Chain Replacement

Complete the initial steps described in 'Chain Replacement'. Conduct the following additional steps on double fall hoists to complete load chain replacement installation.

1. Slowly operate the hoist in the raise direction to run off the old chain and reeve the new chain over the chain wheel. Refer to Dwg. TPA706-4.

NOTICE

- **On double chain fall hoists the total number of load chain links must be an ODD number. Ensure the new load chain has an odd number of total chain lengths.**
  Refer to Dwg. MHP0441.
- **The first link of new chain over the powered chain wheel must be a standing link.**

2. After the new chain has been reeved over the powered chain wheel, remove the old chain and the 'C' link. Secure the dead end of the load chain to the dead end chain anchor located on the hoist.
   Refer to Dwg. TPA706-3. Make certain the load chain is not twisted between the chain wheel and dead end chain anchor.
3. Reeve the load end of the load chain around the bottom block idler chain wheel. Ensure the chain is not twisted between the hoist chain wheel and the bottom block chain wheel.
   Refer to Dwg. TPA706-2.
4. Ensure the load chain remains straight and attach the load end of the load chain to the chain anchor bracket located on the hoist.
   Refer to Dwg. TPA706-1.
5. Lubricate the load chain. Refer to "LUBRICATION" section.
6. Operate the hoist slowly in both directions. Hoist must operate smoothly, without sticking or binding.

HL4500K and HL6000K Chain Replacement

Complete the initial steps described in 'Chain Replacement'. Conduct the following additional steps on three and four fall hoists to complete load chain replacement installation.
Refer to Dwg. TPA1056 for HL4500K hoists and TPA1057 for HL6000K hoists.

1. Keeping the new load chain straight, slowly operate the hoist in the raise direction to run off the old load chain and reeve the new load chain over the powered and idler chain wheels.

NOTICE

- **Make certain the welds and links on the new chain match the positioning of the welds and links on the chain being replaced. The new chain must be installed such that as it is reeved through the hoist the first link of new load chain over the powered chain wheel will be a standing link with the weld facing away from the powered chain wheel.**

2. After the new load chain is reeved over the powered chain wheel, remove the old chain from the dead end chain anchor at the side of the hoist and attach the end of the new chain. Ensure the load chain is not twisted between the powered chain wheel and the dead end chain anchor.

⚠ WARNING

- **Twisted load chain can jam as it passes over the chain wheels, damaging to the hoist and possibly breaking the chain resulting in injury and property damage.**

3. Keep the load end of the load chain straight, attach the load end link to the load end chain anchor located in the bottom block (HL4500K) or in the upper suspension housing (HL6000K). Do not twist the chain when attaching it to the load end chain anchor. If necessary cut the last link from the load chain and remove it to prevent twisting.
   Refer to Dwg. MHP0441.
4. Lubricate the load chain. Refer to the "LUBRICATION" section.
5. Run the hook up and down several times under power with no load to ensure the load chain is running smoothly over the chain wheels. There must be no apparent binding or evidence of malfunctioning.

Servicing the Filter and Strainer

1. Disconnect the air supply from the hoist.
2. Unscrew the air hose from the inlet strainer (24C).
3. Unscrew the inlet strainer from the inlet body (23).
4. Clean the screen inside the inlet strainer by washing with a quality, non-toxic, nonflammable commercial solvent in a well ventilated area. If the screen is damaged or cannot be cleaned, replace the inlet strainer.
5. Unscrew the inlet stud (24) from the valve chest (6) and remove the inlet stud and inlet body from the valve chest.
6. Push the inlet stud out of the inlet body.
7. Remove the two swivel inlet seals (24A) from the inlet stud.
8. If the swivel inlet gasket (24B) is damaged, replace it.
9. If hoist is equipped with a filter inside the inlet stud, clean by washing with a quality, non-toxic, nonflammable commercial solvent in a well ventilated area. If the filter cannot be cleaned, replace the inlet stud. (New style inlet studs do not have filters).
10. Moisten the new swivel inlet seals with O-Ring lubricant and install them in the grooves around the body of the inlet stud.
11. Push the inlet stud into the inlet body until the 'hex' of the stud is flush against the face of the inlet body.
12. Keep the threaded hole of the inlet body facing away from the hoist and screw the inlet stud into the valve chest.
13. Screw the inlet strainer into the inlet body.
14. Screw the air hose into the inlet strainer.
15. Reconnect the air supply to the hoist.

Disassembly

⚠ WARNING

- **Disconnect the air supply hose before performing any maintenance or repairs on this hoist.**

Refer to 'General Maintenance Instructions' and also note:

1. The HLK hoist is constructed of various modules. During the process of disassembly it is not always necessary to disassemble a particular module just because it is removed from the hoist. For example, the valve chest assembly must be removed (as an assembly) to access and disassemble the motor. However, the valve chest need not be disassembled unless parts within the valve chest require replacement.
   Do not disassemble the hoist any further than necessary to replace or repair damaged parts.
2. Do not disassemble this hoist unless you have a complete set of new gaskets, O-Rings and seals on hand for replacement. These are available in overhaul gasket kit No. HLK-K445. Idler wheel seals (108) and hook pins (130) are not included in the kit and must be ordered separately.
3. Do not attempt to wash sealed bearings.

New Style Valve Chest Disassembly

This procedure describes the disassembly of valve chests used on hoists with the second letter of the Serial Number other than A through G, or with second and third letters of the Serial Number other than HA, HB or HC. Replacement part numbers are listed in the parts section. Refer to Dwg. TPA958-1.

1. On hoists with pendant control, disconnect the three pendant hoses (171) from the fittings (181) and (182). Remove the valve chest plate screw (30) and disconnect the strain relief cable (175).
2. Remove the pendant links (183).
3. Unscrew the valve chest screws (26) and (27) and remove the valve chest (6) and valve chest gaskets (25).
4. Unscrew and remove the swivel inlet assembly. Push the inlet stud (24) out of the inlet body (23) to expose the swivel inlet seals (24A).
5. Unscrew the valve chest cover screws (22) and remove the valve chest cover (18) and valve chest cover gasket (16).
6. Remove the piston and piston shaft assemblies (14 and 15) and piston springs (13).
7. Remove the valve seat lock screws (11).
8. While exerting pressure against the valve seats (10), use retainer ring pliers to remove the valve seat retainers (12).
9. Using a hooked tool, pull the valve seats from the valve chest or rap the bottom of the valve chest on a block of wood.
10. Remove the valve assemblies (7) and (8) and valve springs (9) from the valve chest.
11. If the piston shaft seals (15A) require replacement, press the piston retaining pins (15B) from each piston and shaft and slide the pistons off the shafts.

Old Style Valve Chest Disassembly

This procedure describes the disassembly of valve chests used on hoists with second letter of the Serial Number A through G or with second and third letters of the Serial Number HA, HB, or HC. Refer to Dwg. TPA883-3.

NOTICE

- **Replacement parts for this valve chest are no longer available. Order kit No. MLK-K545B (03835519) to replace this style valve chest if it cannot be repaired.**

1. On a hoist with pendant control, disconnect the three pendant hoses (171) at the elbows (181) and (182). Remove the valve chest plate screw (30) and disconnect the strain relief cable (175).
2. Unscrew and remove the inlet strainer (24C).
3. Unscrew the valve chest screws (26) and (27) and remove the assembled valve chest and valve chest gaskets (25).
4. Unscrew and remove the swivel inlet assembly. Slide the inlet stud (24) out of inlet body (23) to expose the swivel inlet seal (24A).
5. Unscrew the valve chest cover capscrews (339), and withdraw the valve chest cover (334) along with the piston rods (328) and (329), pistons (330) and piston springs (333). Remove the valve chest cover gasket (338).
6. Withdraw the two valves (325) and the two valve springs (327).

NOTICE

- **Valves (325) and sleeves are manufactured as a matched set. Do not mix valves and sleeves. Ensure the valves are marked for sleeve location at disassembly.**

■ Brake Disassembly

Refer to Dwg. TPB704-3.

1. Unscrew the four shoulder bolts (89) and lockwashers (90) and separate the springs (81) and piston housing (80) as an assembly from the gear case cover (69).

NOTICE

- **When assemblies are separated into component parts the exposed O-Rings and gaskets should be discarded and replaced with new during assembly.**

2. Remove the brake plates (78) and brake discs (79) from the gear case cover. Remove O-Ring (air port) (77) and discard.
3. Disassemble the spring and piston housing as follows:
   a. Remove the plate screws (88) and the plate (87).
   b. Place the assembly, pressure plate (82) downward, on an arbor press, or; place the assembly vertically in a vise.
   c. While holding the housing against the compression of the springs (81), hold the pressure plate screw (82A) with a wrench and unscrew the piston nut (82B).
   d. Relax the tension of the compressed springs (81) by slowly and carefully easing up on the arbor press or vise.
   e. Remove the pressure plate and push the piston (83) from the housing. Remove O-Rings (84) and (85) and discard.
4. To remove the brake driver (73), remove retainer screw (76) and brake seal retainer (74). Slide brake driver off motor shaft (38). Remove brake seal (75) and discard.

■ Motor Disassembly

Refer to Dwgs. TPA958-1 and TPB703-3.

1. Remove the brake mechanism. Refer to 'Brake Disassembly' section.
2. Drain oil from the gear case.
3. Remove the valve chest (6) as an assembly. Refer to applicable (new or old style) valve chest disassembly section.
4. Remove the limit actuator retaining pin (34) and withdraw the limit actuator (33).
5. Unscrew the remaining valve chest plate screws (30) and remove the valve chest plate (28).
6. Grasp the rear end plate (41) and pull the motor from the hoist as an assembly. If the motor is a little "sticky", tap on the brake end of the motor shaft (38) with a soft drift to loosen.
7. Grasp the motor shaft vertically in copper-covered vise jaws.
8. Remove the motor shaft rear retaining ring (39).
9. Separate the rear end plate (41), rear end plate bearing (40), cylinder (44), cylinder dowel (45), vanes (43), rotor (42), front end plate (46) and front end plate bearing (47) into component parts.

■ Disassembly of the Gearing, Pocket Wheel, Chain Guide, Chain Guard, and Throttle Shaft

Refer to Dwgs. TPB705-2 and MHP1065.

NOTICE

- **When assemblies are separated into component parts the exposed O-Rings and gaskets should be discarded and replaced with new during assembly.**

1. Remove the brake mechanism. Refer to 'Brake Disassembly' section.
2. Remove the motor. Refer to 'Motor Disassembly' section.

3. Remove the four gear case capscrews (70) and lockwashers (71). Remove the gear case cover (69). It may be necessary to use a slide hammer puller attached to a bar and fastened to two of the brake cover bolt holes.
4. Remove the gear case cover gasket (66) and discard.
5. If required, separate the fixed ring gear (67) from the gear case cover (69) by gently prying the ring gear from the cover, or by removing the ring gear pins (68). Discard the ring gear pins and replace with new.
6. Withdraw the planet frame (54) and gears as an assembly. The planet frame may then be disassembled.
7. Do not remove the needle roller bearings (63A) or (58) from the planet frame or planet gears unless required for repair. If removed they must be discarded and replaced with new sets.
8. Drive out the throttle lever retaining pin (36) from the throttle shaft (32).
9. From the motor end of the hoist, withdraw the throttle shaft (32) and remove the throttle lever (35), throttle lever thrust washers (36A) and throttle shaft spring (37).
10. Withdraw the ring gear (52), powered chain wheel (51A), ring gear bearing (50) and planet frame bearing (63C).
11. Remove the four chain guide capscrews (4A), lockwashers (4B) and the chain guide (4).
12. Remove the chain guard (5).

Chain Container Disassembly

Fabric and Metal Chain Container Disassembly

Refer to Dwg. TPC451-3

1. Run bottom block to lowest point to remove chain from container. Disconnect hoist from air supply.

WARNING

- **Disconnect the hoist from the air supply before removing chain container.**

2. Separate connecting link (91) and remove support chain (306).
3. Remove nuts (303), lockwashers (304) and bracket bolts (302) connecting mounting bracket (301) to hoist.
4. Remove container as an assembly from hoist.
5. If further disassembly is required, refer to Dwg. TPC451-3 to separate the assembly into its component parts.

Metal Chain Container HLK-K750-85 Disassembly

Refer to Dwg. 10552230

1. Run bottom block to lowest point to remove chain from container. Disconnect hoist from air supply.

WARNING

- **Disconnect the hoist from the air supply before removing chain container.**

2. Disconnect short piece of link chain (325) from boss on side of hoist by seperating Connecting link (91) and removing link.
3. Remove self locking nuts (326) and Bracket bolts (324) connecting mounting Bracket (317) to hoist.
4. Remove container as an assembly from Hoist.
5. If futher disassembly is required, refer to Dwg. 10552230 to seperate the assembly into its component parts.

Cleaning, Inspection and Repair

Use the following procedures to clean, inspect, and repair the components of the hoist:

Cleaning

CAUTION

- **Bearings that are loose, worn or rotate in the housing must be replaced. Failure to observe this precaution will result in additional component damage.**
- **Do not use trichloroethylene to clean parts.**

Clean all hoist component parts in solvent (except for the brake discs). Care must be taken to clean components thoroughly, but not damage components during cleaning. The use of a stiff bristle brush will facilitate the removal of accumulated dirt and sediments on the gears and frames. If bushings have been removed it may be necessary to carefully remove old Loctite® from the bearing bores without damaging the mating surfaces. Dry each part using low pressure, filtered compressed air.

Inspection

All disassembled parts should be inspected to determine their fitness for continued use. Pay particular attention to the following:

1. Inspect all gears for worn, cracked, or broken teeth.
2. Inspect all bushings for wear, scoring, or galling.
3. Inspect shafts for ridges caused by wear. If ridges caused by wear are apparent on shafts, replace the shaft.
4. Inspect all threaded items and replace those having damaged threads.
5. Measure the thickness of the brake discs (79). If the brake discs are less than 0.090 in. (2.23 mm) replace the brake discs (79) as a set.
6. Check mufflers (20) and (31) for damage or excessive dirt.
7. Check bearings for rotation and wear. Replace if bearings do not rotate smoothly, without sticking or binding, or if bearings are damaged or excessively worn.
8. Inspect brake driver bearing wear area on brake driver (73) and in planet gear frame (54) for ridges or galling. If either condition exists replace parts.

Repair

Actual repairs are limited to the removal of small burrs and other minor surface imperfections from gears and shafts. Use a fine stone or emery cloth for this work.

1. Worn or damaged parts must be replaced. Refer to the applicable parts listing for specific replacement parts information.
2. Inspect all remaining parts for evidence of damage. Replace or repair any part which is in questionable condition. The cost of the part is often minor in comparison with the cost of redoing the job.
3. Smooth out minor nicks, burrs, or galled spots on shafts, bores, pins, or bushings.
4. Examine all gear teeth carefully, and remove nicks or burrs.
5. Polish the edges of all shaft shoulders to remove small nicks which may have been caused during handling.
6. Remove all nicks and burrs caused by lockwashers.
7. Replace all seals, O-Rings and gaskets.

The following assembly instructions are for a complete assembly of the hoist component modules. Conduct those assembly steps necessary to reassemble the hoist from the point of which your disassembly ended. For example: if the brake was removed as an assembly to access the hoist gears, it is not necessary to completely reassemble the brake to reinstall. Conduct only the steps necessary to reattach the brake assembly to the hoist.

■ General Instructions

Refer to 'General Maintenance Instructions' and also:

1. The HLK Hoist is constructed of various modules. The following instructions will first describe how to assemble the individual modules and finally, how to assemble a complete hoist from the assembled modules.
2. Always press against the stamped end of a needle-type bearing when installing the bearing in a bearing recess.
3. Always clean and wipe every part (except the brake parts) with a thin film of oil before installation.
4. Never clean sealed bearings using solvent or any other cleaner. Carefully remove dirt, externally applied lubricants and sediment with a rag or stiff bristle brush.

■ Chain Guard Assembly

Refer to Dwg. MHP1065.

1. Place the chain guard (5) in housing (1).
2. Install the chain guide (4) and loosely secure in place with the chain guide capscrews (4A) and lockwashers (4B).
3. When hoist is completely assembled tighten capscrews.

■ Planet Gear Frame Assembly

Refer to Dwg. TPB705-2.

1. Press a new planet gear bearing (58) into each end of the planet gears (57). Seat each bearing 1/64 in. (0.5 mm) below the face of the gear.
2. Work a liberal amount of **Ingersoll Rand** No. 11 grease into the bore of the planet gear bearings. Ensure each of the individual needles or rollers are thoroughly covered.
3. Stand the planet gear frame (54) on the table of an arbor press with its short hub upward.
4. Wipe a thin film of **Ingersoll Rand** No. 11 grease on both ends of the planet gears (57) and on the planet gear thrust races (60) and gear thrust bearings (59). Use enough lubricant to allow it to hold the parts in position. Place a planet gear thrust race (60), gear thrust bearing (59) and a second gear thrust race (60) against each face of the planet gear (57).
5. Slide the planet gear/thrust races/thrust bearing assembly, with the planet gear large diameter gear teeth located towards the short hub on the planet gear frame, into one side of the planet gear frame. Press in a planet shaft (61) to secure the gear assembly in the gear frame.
6. Repeat steps 4 and 5 for the second and third planet gear assemblies.
7. Work a liberal amount of **Ingersoll Rand** No. 11 grease into the bore of the brake driver bearing (63A), making certain that each individual needle or roller is covered. Press the brake driver bearing (63A) into the bore of the planet frame (54) hub. Seat bearing 3/16 in. (5 mm) below the face of the hub into the bore of the planet frame (54) hub.
8. Install a new brake driver seal (63B) with the lip facing the bearing (63A).
9. Place the planet frame retainer (62), planet frame seal (65) and oil slinger (63) on planet frame (54) hub. Install planet frame spacer (64) on hub.
10. Ensure the retainer ring is installed on planet frame bearing (63C). Press the bearing fully onto the planet frame (54) hub. Ensure the retainer ring is located with the shortest distance to the edge of the bearing towards the planet frame.
11. Position the planet gear frame (54) such that the pinion gear (72A) or (72B) may be installed from the motor side of the planet frame assembly with the brake side accessible for correct timing mark alignment checks.
12. Refer to Dwg. MHP0569. Rotate the three planet gears until the "X"s on the ends are all located towards the center of the planet frame (54). The timing marks ('•') on the planet gears (57) must locate on the centerline of the outside exposed gear splines.

⚠ CAUTION

- **It is very important that the Planet gears (57) and Ring gear (52) are correctly aligned when the planet frame assembly is inserted into the Ring gear.**

Planet Gear Timing Mark Arrangement

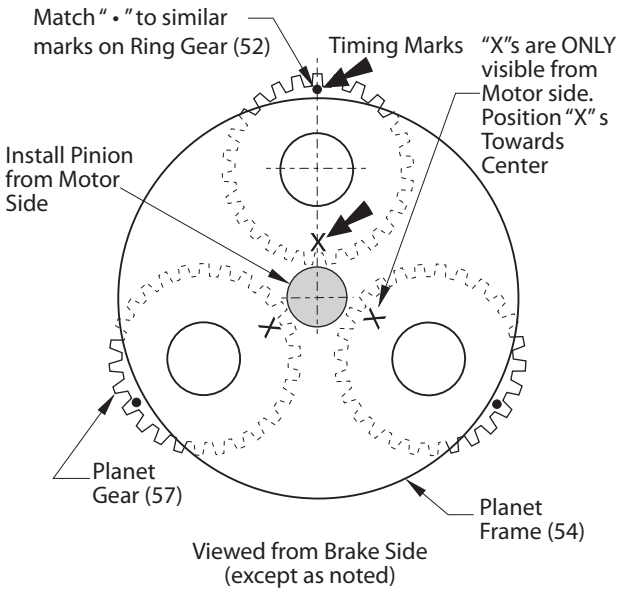

(Dwg. MHP0569)

13. Install the pinion gear (72) with a tooth of the pinion entering each of "X" marked planet gear (57) spaces. The pinion gear internal spline must be located towards the end of the planet frame with the hub (brake end).
14. Ensure the retainer ring is installed on planet frame bearing (56). Place the planet frame spacer (55) on planet frame bearing (56). Install the spacer on the side of the bearing with the most clearance between the retainer ring and the end of the bearing. Press the bearing assembly into the planet frame (54), spacer (55) first, until spacer and retainer ring are flush with the frame.
15. Lubricate and press seal (53) into end of ring gear (52).
16. Lubricate the gear splines and teeth on the planet gears and ring gear (52) with **Ingersoll Rand** No 11 grease. Align the '•' matchmarks on the planet gears (57) to similar '•' matchmarks on ring gear (52) and place the planet frame assembly into the ring gear (52).
17. To install in hoist, refer to 'Hoist Assembly' section.

■ Motor Assembly

Refer to Dwg. TPB703-3.

1. Grasp the motor shaft (38) vertically in copper-covered vise jaws so that the short-splined end is upward.
2. Press the front end plate bearing (47) into the front end plate (46), and the rear end plate bearing (40) into the rear end plate (41). Apply grease to both bearings.
3. Slide the front end plate and bearing, bearing side first, down over the motor shaft until it seats against the motor shaft shoulder.
4. Slide the rotor (42), counterbored end first, down over the motor shaft until it contacts the front end plate.
5. Moisten each vane (43) with SAE 10 or SAE 20 nondetergent oil, and place a vane in each slot in the rotor (42).
6. Set the cylinder (44) on the rotor, aligning the dowel hole in the cylinder with the dowel hole in the front end plate (46).
7. Slide the rear end plate (41) and bearing (40) assembly, plate flat side first, onto the hub of the motor shaft until it contacts the cylinder. Align the dowel hole in the rear end plate with the dowel hole in the cylinder.
8. Install the motor rear retainer ring (39) in the annular groove on the end of the motor shaft (38).
9. Insert a 1/8 in. (3 mm) steel guide rod about 12 in. (305 mm) long through the dowel holes in the end plates and cylinder to maintain alignment of parts, and remove the assembly from the vise.
10. To install in hoist, refer to 'Hoist Assembly' section.

■ Brake Assembly

Refer to Dwg. TPB704-3.

1. Lightly coat the piston seals (84) and (85) with O-Ring lubricant, and install them in their respective grooves on the brake piston (83).
2. Taking care not to cut the seals, slide the piston into the brake spring and piston housing (80).
3. Place the spring and piston housing on the workbench with the three spring cavities facing upward.
4. Place a spring (81) in each cavity.
5. **For New Style Pressure Plates (82):** install the pressure plate screw (82A) such that the screw head mates with the counterbore in the pressure plate face. Place the pressure plate (82) and screw over the springs so that the screw enters the hole in the brake piston.

   For Old Style Pressure Plates with and Integral Stud: Install the pressure plate, stud side first, over the springs so that the stud enters the hole in the brake piston.

NOTICE

- **For improved brake control it is recommended that the old style pressure plate be replaced with the new style pressure plate (82) and screw (82A). The old style pressure plate is not available as a replacement part. To replace order Brake Kit No. MLK-ABK1.**

6. Carefully place the assembly in a vise and compress the pressure plate against the brake springs and piston housing until the screw protrudes through the piston. Thread the piston nut (82B) onto the screw at least two full thread lengths, but not enough to fully engage the nut.
7. Slowly release the assembly from the vise.
8. **For New Style Pressure Plates:** tighten the pressure plate screw (82A) and piston nut (82B) until a 0.006 to 0.012 in. (0.15 to 0.30 mm) gap exists between the pressure plate and piston. Refer to Dwg. MHP0488.

NOTICE

- **When adjusted, the piston (83) assembly should free float between piston nut (82B) and pressure plate (82). Ensure piston moves freely between nut and pressure plate.**

For Old Style Pressure Plates: torque the piston nut to 50 to 70 inch-lb (6 to 8 Nm).

NOTICE

- **Ensure the piston extends completely through the spring and piston housing and contacts the pressure plate.**

9. Install the plate (87) in the recess of the spring and piston housing (80) and secure using two plate screws (88).
10. To complete brake installation in hoist, refer to 'Hoist Assembly' section.

Brake Spring and Piston Housing Assembly

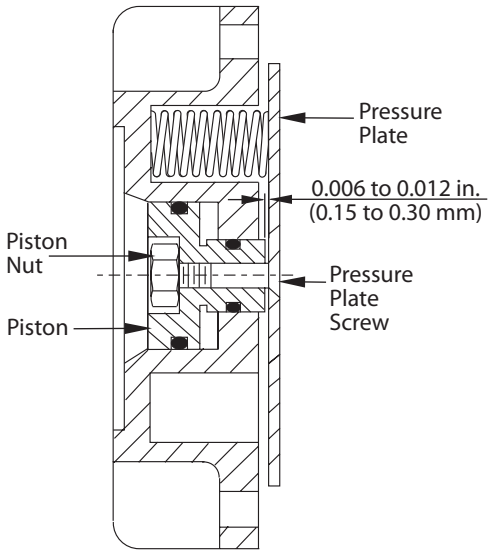

(Dwg. MHP0488)

■ Valve Chest Assembly (New Style)

This procedure describes the assembly of valve chests used on hoists with the second letter of the Serial Number other than A through G, or with second and third letters of the Serial Number other than HA, HB or HC, or hoist valve chests that have been updated with Valve Chest Kit No. MLK-K545B. Replacement part numbers are listed in the Parts section.
Refer to Dwg. TPA958-1.

1. If the valve chest cover pins (17) were removed, install them in the bottom of the valve chest (6).
2. Apply a thin film of O-Ring lubricant to the valve seals (7A) and (8A) and install them on the valves (7) and (8).

⚠ CAUTION

- **Do not substitute any other O-Rings for the valve seals.**

3. Install a valve spring (9) on the non-tapered end of each valve and insert the valves, valve spring first, into the openings at the bottom of the valve chest. Make certain the valve marked 'U' is inserted into the opening marked UP VALVE and the valve marked 'D' is inserted in the opening marked DOWN VALVE.
4. Apply a thin film of O-Ring lubricant to the valve seat shaft seals (10B). Install a seal in each valve seat (10).
5. Apply a thin film of O-Ring lubricant to the valve seat seals (10A) and install two seals on each valve seat.
6. Align the smaller diameter crosshole of the valve seat with the threaded hole in the side of the valve chest for the valve seat lock screw (11). With the hub end trailing, install the valve seats in the valve chest.
7. Screw the valve seat lock screws into the valve chest. Make certain they enter the valve seats. Torque the screws to 24 in lb (3 Nm).
8. Using retainer ring pliers and applying pressure to the hub of the valve seat, install the valve seat retainers (12). Make certain the retainers seat in the grooves of the valve chest.
9. If the pistons (14) were separated from the piston shafts (15), apply a thin film of O-Ring lubricant to each piston shaft seal (15A) and install them in the grooves of the piston shafts.
10. Slide the pistons onto the piston shafts with the small hub of the piston toward the smallest diameter of the shaft. Align the crosshole in each piston with the crosshole in each shaft and install the piston retaining pins (15B).
11. Apply a thin film of O-Ring lubricant to the piston seals (14A) and install one on each piston.
12. Apply a thin coat of O-Ring lubricant on the piston cylinder walls and insert the piston springs (13) into the valve chest against the valve seat retainers.
13. Install the assembled pistons and shafts in the valve chest.
14. Apply a thin coat of O-Ring lubricant to the valve chest cover seals (18A) and install them in the valve chest cover (18).
15. Align the valve chest cover gasket (16) with the valve chest cover pins and place the gasket against the valve chest.
16. Align the valve chest cover with the valve chest cover pins and piston shafts and place the cover against the valve chest.
17. Install the six valve chest cover screws (22). Tighten screws evenly and torque to 72 in lb (8 Nm).
18. Thread the adjustment screw locknuts (21) onto the bleed adjustment screws (19) and install the screws in the valve chest cover.

NOTICE

- **Use these screws to adjust hoists with pendant control. Refer to 'Pendant Control Adjustments' in the "INSTALLATION" section.**

19. Manually work the piston shaft assemblies up and down when installed in the valve chest. The piston shafts must shift smoothly with no indication of binding of parts.

■ Valve Chest Assembly (Old Style)

This procedure describes the assembly of valve chests used on hoists with second letter of the Serial Number A through G or with second and third letters of the Serial Number HA, HB, or HC.
Refer to Dwg. TPA883-3.

NOTICE

- **Replacement parts for this valve chest are no longer available. Order kit No. MLK-K545B (03835519) to replace this style valve chest if it cannot be repaired. The following assembly instructions are provided for reference only.**

1. Moisten the valve sleeve seals (326) with O-Ring lubricant and install them on the valve sleeves (325).

⚠ CAUTION

- **When installing the valve and valve sleeve assemblies (325), make certain the valves do not get mixed. These are assembled as matched sets.**

NOTICE

- **Each valve sleeve has a notch in one end and a 7/16 inch (11 mm) diameter port in the wall of the sleeve. Inside the valve chest there is a 7/16 inch (11 mm) diameter cross-port that connects the two valve chambers.**

2. Insert the valve sleeves, notched end first, into the valve chest so that the 7/16 in. (11 mm) diameter port in each sleeve is aligned with the cross-port in the valve chest, and so that the notches in the sleeves face each other.
3. Stand the valve chest up on the inlet port and insert a valve spring (327) and a valve (325) into each valve sleeve. Make certain each valve goes into its proper sleeve. These are matched sets.
4. Moisten each piston seal (331) with O-Ring lubricant and install a seal in the groove on each piston (330).
5. Insert each piston rod (328 and 329), small end first, through its respective hole in the piston.
6. Install a piston nut (332) on each piston rod. Tighten the nut to a snug fit.
7. Moisten the valve chest cover seals (335) with O-Ring lubricant, and install them in the valve chest cover (334).
8. Position the valve chest cover so that the bleed holes and adjustment screws (336) are facing you. Moisten the large diameter of the piston rods with O-Ring lubricant. Insert the longer piston rod (328) through the hole on the left from the gasket side of the valve chest cover. Insert the shorter piston rod (329) through the hole on the right from the gasket side.
9. Place a piston spring (333) in each valve cavity in the valve chest, and position the valve chest cover gasket (338) on the bottom of the valve chest.
10. Taking care not to pinch the piston seals, install the assembled valve chest cover to the bottom of the valve chest. Check to make sure the long stem piston rod (328) is installed in "UP VALVE" side as marked on gasket face of valve chest. Tighten the valve chest cover screws (339) evenly a little at a time until all are tight.

Assembly of Hoist

1. If removed, install new throttle shaft bearings (2) in the housing and apply a light coating of grease.
2. Install the O-Ring seal (51) in the housing.
3. Install the chain guard (5) in the housing.
4. Install a new oil seal (53) in the output ring gear (52) with the lip facing inward. Coat the lip with a film of oil or grease.
5. Ensure the retainer ring is located on the shaft bearing (50). Install the bearing on the ring gear (52) with the retainer ring end located towards the ring gear.
6. Lubricate the gear splines on the ring gear (52) shaft and the chain wheel (51A) with **Ingersoll Rand** No. 11 grease. Install the chain wheel on ring gear shaft. 7. Install shaft bearing (49) onto the ring gear (52).
8. Install ring gear (52) assembly in housing.
9. Install the chain guide (4), four chain guide capscrews (4A) and lockwashers (4B).
10. Insert the motor retainer washer (48) in the housing. The raised outer diameter should be toward the open/motor end of the housing.
11. Install the motor assembly in the housing by aligning the motor guide rod with the dowel hole in the bottom of the housing and sliding the motor into the housing.
12. Remove the guide rod and replace it with a cylinder dowel (45). Tapered end of dowel pin must enter first. Dowel should be positioned approximately 1/8 in. (3 mm) below the rear end plate (41) surface.
13. Place a housing gasket (3) on the motor end of the hoist and install the valve chest plate (28) and screws (30). Check that motor shaft (38) turns freely by hand without sticking or binding.
14. Note the matchmarks '•' on the ring gear (52) and on the three planet gears (57). The planet frame assembly must be inserted into the hoist such that the pinion gear (72) internal splines align with the motor shaft (38) splines. Also, the matchmarks '•' on the planet gears must align with the matchmarks '•' on the ring gear.
15. Place the gear case gasket (66) on the end of the housing with the gasket hole aligned with the air port.
16. If removed, install the fixed ring gear (67) and ring gear pins (68) in the gear case cover.
17. Install the gear case assembly with gasket on the hoist aligning the ring gear roll pins and brake port. Install the four bolts and lockwashers.
18. Install the brake driver (73), brake seal (75), brake seal retainer (74), and brake driver retainer screw (76). Apply a small amount of silicone sealant to O-Ring. The brake driver retainer screw is a self-locking type screw that should be replaced anytime the hoist is disassembled. Torque the screw to 50 in lb (5.65 Nm).
19. Check that the brake driver turns freely by hand. If the brake driver does not turn without restriction in both directions the hoist must be inspected to determine the cause of sticking or binding before further assembly.
20. If removed, assemble the upper suspension. On hook units, inspect the hook and hook latch as described in the "INSPECTION" section. Assemble the latch to the hook. Lubricate the thrust bearing (106).

For HL1000K to HL3000K Hoists:

Assemble the hook (102), thrust bearing (106), thrust washers (107), hook nut (104) and top yoke (101). Be sure to install the roll pin (105) to lock the hook nut on the hook. Mount the top yoke assembly or the lug mount kit to the hoist using lubricated capscrews and locking tabs under the capscrews. Torque the capscrews to 75 - 125 ft lb (100 - 170 Nm). Bend the locking tabs over the capscrews flats to secure.

For HL4500K and HL6000K Hoists:

Lubricate the thrust bearing (131). Assemble the hook (127), thrust bearing, hook nut (129) and upper suspension housing (101). Be sure to install the hook pin (130) to lock the hook nut on the hook. Mount the top yoke assembly or the lug mount kit to the hoist using lubricated capscrews and locking tabs under the capscrews. Torque the capscrews to 75 - 125 ft lb (100 - 170 Nm). Bend the locking tabs over the capscrew flats to secure.

21. Place the throttle shaft spring (37) over the hub of the throttle lever (35) with the bent leg of the spring on the outer side of the throttle lever.
22. Hold the throttle lever in the housing recess beneath the pocket wheel with the bent ends of the lever toward the valve chest end of the hoist and the legs of the throttle shaft spring engaging a rib on the bottom of the chain guide. Insert the throttle shaft (32), round end first, through the valve chest plate, housing and throttle lever. Install a thrust washer (36A) against the hub of the throttle lever. Install a thrust washer (36A) against the throttle shaft spring. Install the throttle lever retaining pin (36).

NOTICE

- **On hoist models HL4500K and HL6000K the throttle lever (35) may require adjustment to provide adequate clearance with the upper suspension block. Minor modifications to the throttle lever are acceptable to establish throttle lever clearance.**

23. Stand the hoist upright on the brake end. Place the valve chest gasket (25) on the valve chest plate, making certain that the small flapper is properly positioned in the recess between the two ports.

⚠ WARNING

- **If the valve chest gasket (25) is installed incorrectly, the small flapper will not be in the recess between the two ports. The brake will not release and may cause damage to the hoist.**

24. Center the two round rubber discs in corresponding recesses in the valve chest plate.
25. Place the assembled valve chest (6) on the valve chest gasket. Secure using the valve chest screws (26) and (27).
26. Install hoist load chain as described in the 'Initial Chain Installation' section.
27. Reposition hoist with brake end up. Place a brake plate (78) followed by a brake disc (79), brake plate (78), brake disc (79), and two brake plates (78) over the brake driver (73), aligning the notches in the brake plates with the bolt holes in the gear case cover (69).
28. Reposition hoist with brake end up. Install the assembled brake spring and piston housing (80), making sure the O-Ring (77) is installed at the air port. Install the four shoulder bolts (89) and lockwashers (90).

29. Place the limit actuator (33) on the square end of the throttle shaft, and install the limit actuator retaining pin (34).
30. **For new style hoists** with second letter of the serial number other than A through G or with second and third letters of the serial number other than HA, HB or HC, install the two pendant links (183) between the limit actuator and the valve shafts.

    For old style hoists with pendant control with second letter of the serial number A through G or with second and third letters of the serial number HA, HB or HC, install a pendant link (183) between the limit actuator and the long piston rod.

    For old style hoists with pull chain control with second letter of the serial number A through G or with second and third letters of the serial number HA, HB or HC, no pendant links are required.
31. Apply a thin film of O-Ring lubricant to the swivel inlet seals (24A). Install seals on inlet stud (24) grooves.
32. Carefully push the inlet stud into the inlet body (23). Take care to prevent cutting seals.
33. Apply a thin film of O-Ring lubricant to the swivel inlet gasket (24B). Install the gasket on the inlet stud.
34. Thread the inlet assembly into the top of the valve chest and tighten.
35. Fill gear case with oil per instructions in lubrication section.

Pendant Installation

Refer to Dwg. TPA0882-3.

CAUTION

- **Disconnect the hoist from the air supply before performing maintenance on this hoist.**

When installing a pendant assembly on HLK Hoists, a crimping tool (Part No. ML50K-930AT or a Nicopress® Tool with Groove Size G) must be used to install the clamping sleeve (176) on the ends of the strain relief cable (175).

The strain relief cable (175) must be long enough to allow the pendant hose to hang nearly straight yet short enough to absorb the pendant weight and forces.

CAUTION

- **Ensure the strain relief cable supports the pendant. Do notallow the pendant hoses support the weight of the pendant. Hose failure can cause injury and loss of hoist control.**

NOTICE

- **When the control hoses are cut to length, the hose at the back of the pendant (air in) should extend 6 in. (150 mm) beyond the top clamping thimble.**

Depending upon which valve chest is used on the hoist, the length of the two hoses at the front of the handle will vary.

1. On the new style MLK-A545A valve chest, the hoses should extend 2 in (51 mm) beyond the top clamping thimble (177). Refer to Dwg. TPB767.
2. On the old style MLK-A545 valve chest, the hoses should extend 4 in (100 mm) beyond the top clamping thimble (177). Refer to Dwg. TPB766.
3. Install one hose tie (218) above the pendant handle (160) and one hose tie below the clamping thimble (177). Install the remaining hose ties every 2-1/2 feet (0.76 m) between the hose ties at the handle and thimble.
4. Install the warning tag such that the tag can be read by the operator from the lever side of the pendant handle.

New Style Valve Chest Connections

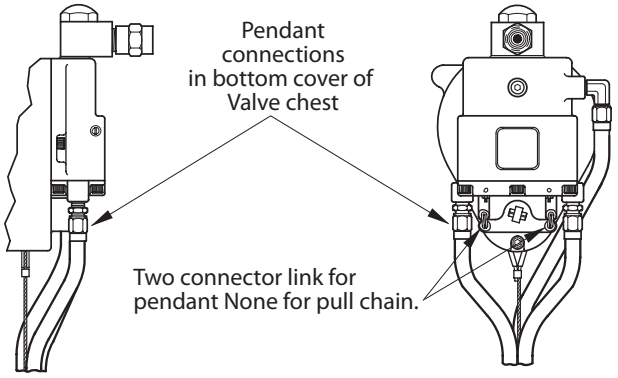

(Dwg. TPB767)

Old Style Valve Chest Connections

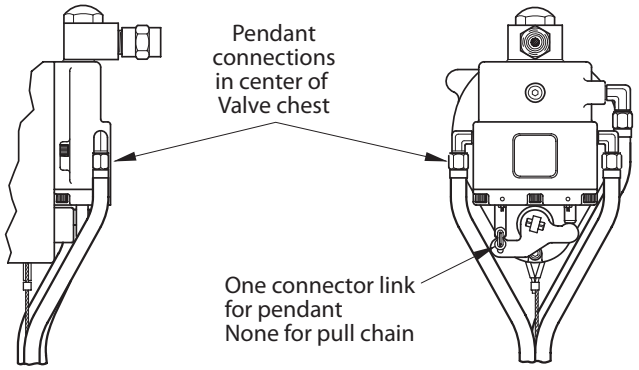

(Dwg. TPB766)

Chain Container

To Install Fabric and Metal Chain Container
Refer to Dwg.TPC451-3

1. Position the mounting bracket (301) between the bosses at the bottom of the hoist in the area of the chain opening.
2. Insert two bracket bolts (302) from the inside of the chain container, through the mounting bracket and bosses. The bracket bolt heads should contact the mounting bracket.
3. Place a washer (304) and bracket nut (303) on each bracket bolt.

NOTICE

- **If the container is to be allowed to swing outward, tighten the bracket nuts (303) to within one turn of being fully tight. This will allow the container to swing away from a load.**

4. Because of space limitations, it may be necessary to depress the throttle lever (35) to install the bracket bolts (302) on hoists equipped with a hand chain throttle. Hoists equipped with a pendant throttle may require removal of the pendant links (183) to install the bracket bolts. Reinstall the pendant links after the mounting bracket is attached to the hoist.
5. Fasten the support bracket (305) to the outside of the chain container with the bracket nut and washer located to the outside of the chain container.
6. Fasten the chain container to the mounting bracket in the same manner.

7. Carefully disassemble the chain anchor (91) and attach one end of the support chain (306) onto the chain anchor with the load chain (92).

CAUTION

- **Make certain the load chain does not become twisted when attaching the support chain to the chain anchor.**

8. Fasten the free end of the support chain to the support bracket with the support bracket bolt (307), support bracket washer (309) and the support bracket nut (308).

NOTICE

- **Adjust the support chain at the support bracket to prevent the load chain from rubbing against the container when operating the hoist.**

To Install Metal Chain Container HLK-K750-85

Refer to Dwg. 10552230
The following instructions are for adding the HLK-K750-85 metal chain container kit to a standard hoist.

1. Run bottom block to lowest point to provide access to the installation area on the hoist. Disconnect hoist from air supply.

WARNING

- **Disconnect the hoist from the air supply before installing chain container.**

2. Position the chain container (318) between the bosses at the bottom of the hoist in the area of the chain opening. Attach Bracket (317) to hoist body. Insert two Bracket Bolts (324) from the inside of the chain container, through the mounting bracket and bosses. The bracket bolt heads should contact the mounting bracket. Install self locking nuts (326) on bolts.
3. Attach short piece of Link Chain (325) to boss on side of hoist using Link (91).
4. Attach Chain Stop assembly (319) near end of load chain. See HLK-K750-85 Chain Stop Placement illustration.
5. Check for proper operation of Control Lever.

HLK-K750-85 Chain Stop Placement

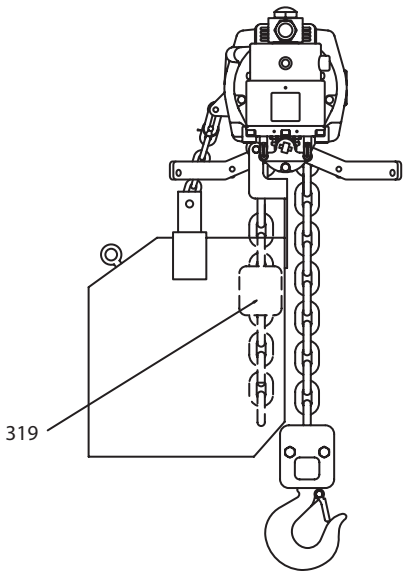

NOTICE

- **Operate the hoist to naturally pile chain into the chain container. Piling the chain carelessly into the container by hand may lead to kinking or twisting that may cause chain to jam the hoist.**

6. Tighten all screws. Provide supply air to hoist, and run chain into container.

Load Test

Prior to initial use, all new, extensively repaired, or altered hoists shall be load tested by or under the direction of personnel instructed in safety, maintenance and operation of this hoist. A written report must be maintained on record confirming the rating of the hoist.

1. Operate the hoist fully in both directions without a load. Hoist must operate smoothly, without evidence of binding. Response to operating controls must be quick and accurate.
2. Place a 10% load on hoist and operate hoist fully in both directions. Hoist must operate smoothly, without evidence of binding. Response to operating controls must be quick and accurate.
3. Dynamically load test hoist to 100% of its rated capacity. Hoist must operate smoothly, without evidence of binding. Response to operating controls must be quick and accurate.

NOTICE

- **Testing to more than 100% may be necessary to comply with standards and regulations set forth in areas outside of the USA.**

HOIST ASSEMBLY DRAWING AND PARTS LIST TABLE OF CONTENTS

Hoist Parts Section Guide (Dwg. TPA884-3) 31
Hoist Housing Assembly Parts Drawing (Dwg. MHP1065) 32
Hoist Housing Assembly Parts List 33
Hoist Valve Chest Assembly Parts Drawing (Dwg. TPA958-1) 34
Hoist Valve Chest Assembly Parts List 35
Hoist Gearing Assembly Parts Drawing (Dwg. TPB705-2) 36
Hoist Gearing Assembly Parts List 37
Hoist Brake Assembly Parts Drawing (Dwg. TPB704-3) 38
Hoist Brake Assembly Parts List 39
Motor Assembly Parts Drawing (Dwg. TPB703-3) and Parts List 40
Top Lug Assembly Drawing (Dwg. TPC449-3) and Parts List 41
HL1000K, HL1000KR and HL1500K Hook Assembly Parts Drawing (Dwg. MHP1105) 42
HL1000K, HL1000KR and HL1500K Hook Assembly and Parts List 43
HL2000K and HL3000K Hook Assembly Parts Drawing (Dwg. MHP1106) 44
HL2000K and HL3000K Hook Assembly Parts List 45
HL4500K Hook Assembly Parts Drawing (Dwg. TPA1041) 46
HL4500K Hook Assembly Parts List 47
HL6000K Hook Assembly Parts Drawing (Dwg. TPA1040) 48
HL6000K Hook Assembly Parts List 49
Pendant Assembly Parts Drawing (Dwg. TPA0882-3) 50
Pendant Assembly Parts List 51
Fabric and Metal Chain Container Assembly Parts Drawing (Dwg. TPC451-3) 52
Fabric and Metal Chain Container Assembly Parts List 53
HLK-K750-85 Metal Chain Container Assembly Parts Drawing (Dwg. 10552230) 54
HLK-K750-85 Metal Chain Container Assembly Parts List 55 55
Repair and Conversion Kits 56
Accessories 57

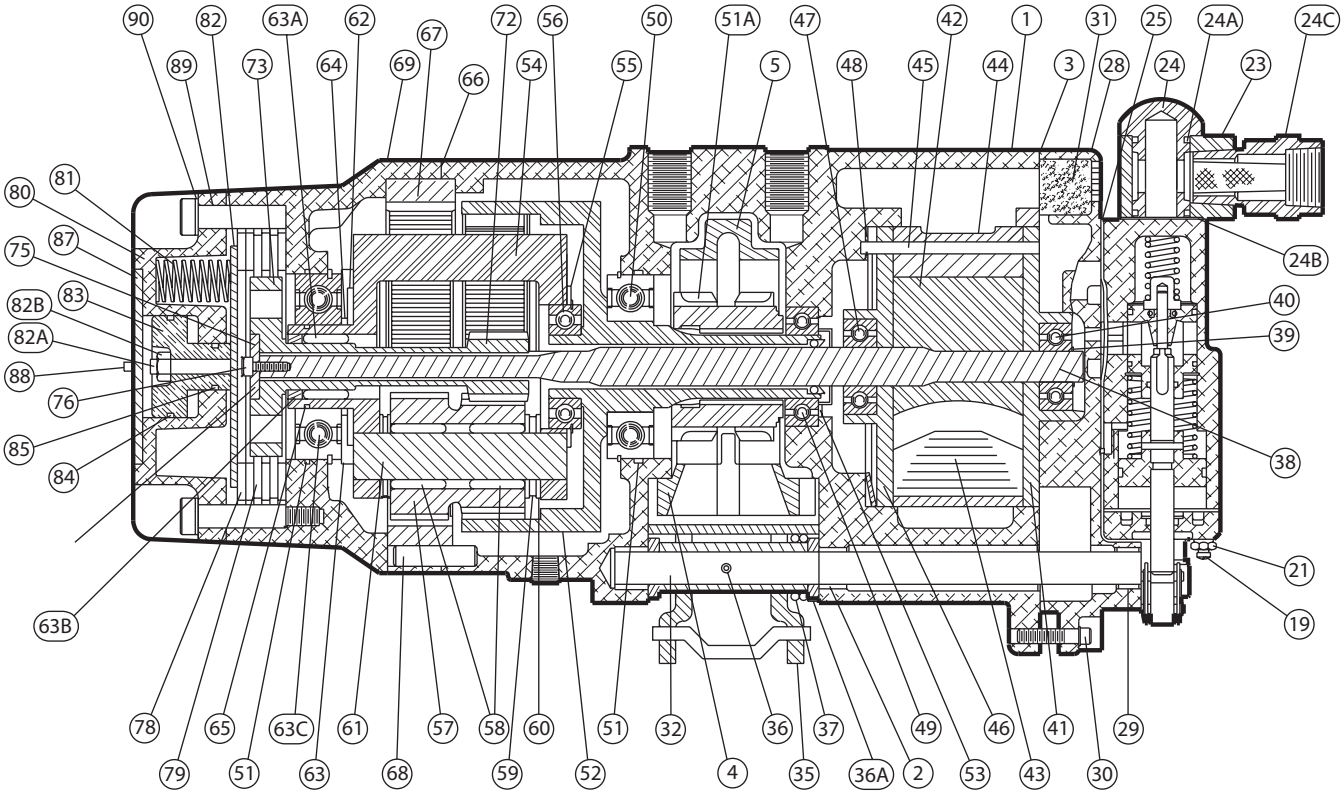
90
82
63A
62
67
72
56
50
51A
47
42
1
31
25
24A
24C
89
73
64
69
66
54
55
5
48
45
44
3
28
24
23
80
81
75
87
82B
83
82A
88
76
85
84
63B
24B
40
39
38
21
19
78
65
63C
61
57
58
60
51
32
36
37
49
46
41
29
79
51
63
68
59
52
4
35
36A
2
53
43
30

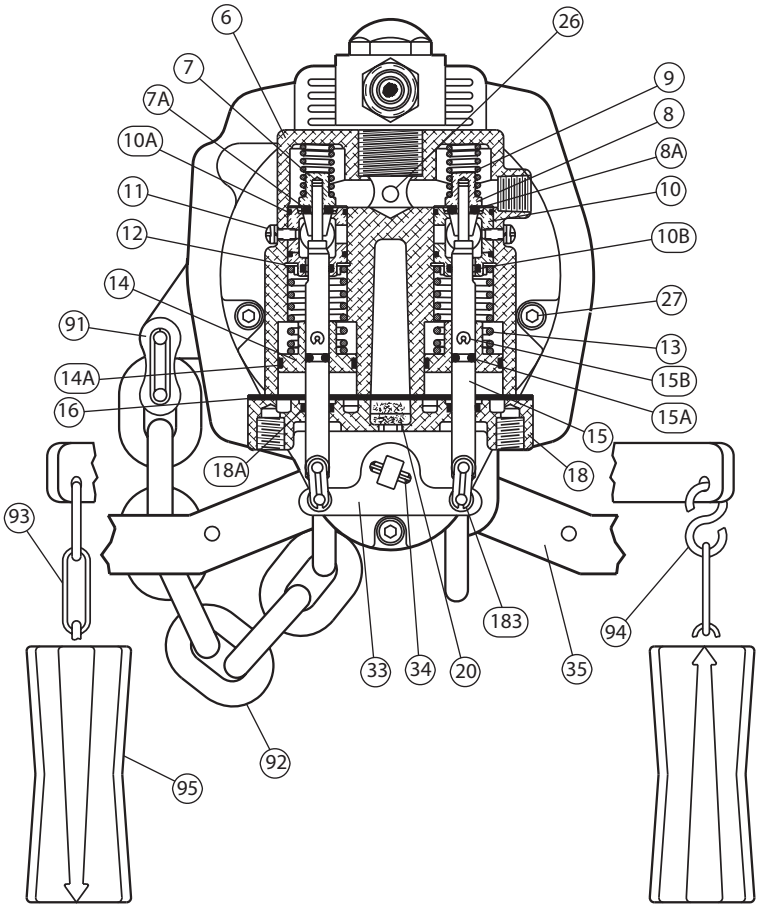
6
26
7
9
7A
8
10A
8A
11
10
12
10B
14
27
91
13
14A
15B
16
15A
15
18A
18
93
183
94
33
34
20
35
92
95

(Dwg.TPA884-3)

HOIST HOUSING ASSEMBLY PARTS DRAWING

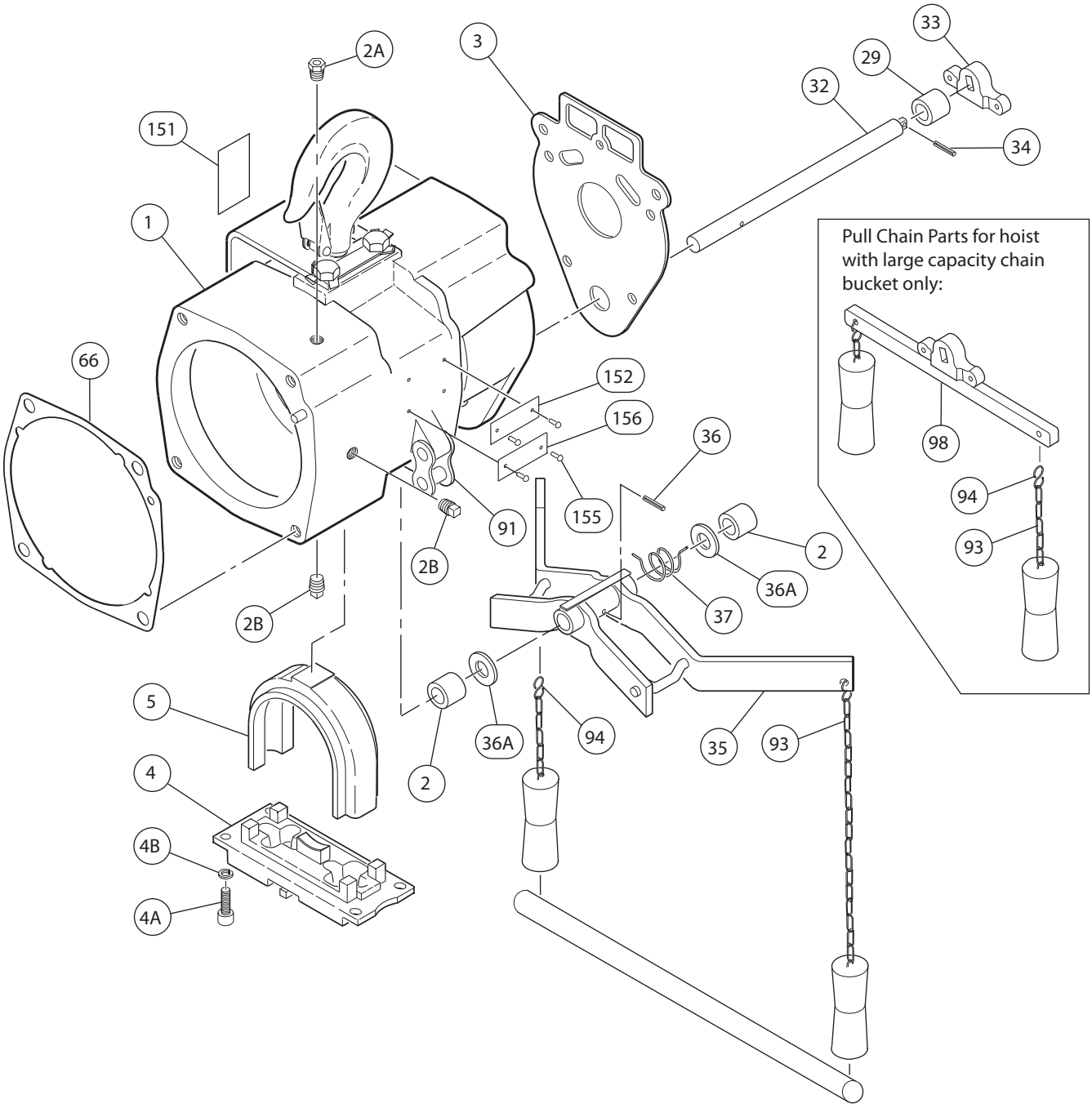

(Dwg. MHP 1065)

HOIST HOUSING ASSEMBLY PARTS LIST

ITEM No.	DESCRIPTION OF PART	QTY	PART NO.
---	Housing Assembly	1	HLK-A300
1	Housing	1	Not sold separately *
• 2	Throttle Shaft Bearing	2	H54U-511
2A	Vent Plug	1	CE210-120
2B	Level and Drain Plug	2	R0H-377
• 3	Housing Gasket	1	ML50K-445
4	Chain Guide	1	HLK-741
4A	Chain Guide Screw	4	G57T-634
4B	Lockwasher	1 Pack of 10	8U-58-10
5	Chain Guard	1	HLK-6
• 29	Throttle Lever Bearing	1	R38M-603
32	Throttle Shaft	1	MHLK-255
33	Limit Actuator (Old Style Hoist) **	1	MLK-251
	Limit Actuator (New Style Hoist) **	1	MLK-251A
34	Limit Actuator Retaining Pin	1	WF171-15
35	Throttle Lever	1	HLK-556
36	Throttle Lever Retaining Pin	1	WF171-15
36A	Throttle Lever Thrust Washer	2	MR-458
37	Throttle Shaft Spring	1	MR-412
66	Gear Case Gasket	1	HLK-31
91	Connecting Link	1	HRA30A-646
93	Standard Pull Chain	Specify Length x 2	CA110-B240
	HL1000KR Spark Resistant Pull Chain		D02-1413
---	Pull Chain Conversion Kit (without Pull Chain) ***	1	MLK-K415A
94	'S' Hook	4	D02-421
96	Plug, Pipe (shown on Dwg. TPA958-1)	1	R0H-377
97	Plug, Vent (shown on Dwg. TPA958-1)	2	P250-546
151	Warning Label	1	04306445
152	Serial Number Label Plate	1	MLK-301S-R
155	Fasteners, Label Plate	4	R4K-302
156	Model Number Label Plate	1	MLK-301M-R

•	Recommended Spare

* Housing (1) not sold separately; purchase housing assembly (HLK-A300).

** New Style Hoist refererences apply to hoists with second letter of the serial number other than A through G or with second and third letters other than HA, HB, or HC.
Old Style Hoist refererences apply to hoists with second letter of the serial number A through G or with second and third letters HA, HB, or HC.

*** Pull Chain Conversion Kit replaces item 33 (Limit Actuator) on Dwg. MHP1065, items 181 (Fitting, Elbow) and 182 (Fitting Nipple) on Dwg. TPA958-1, and attached pendant (including control hoses).

HOIST VALVE CHEST ASSEMBLY PARTS DRAWING

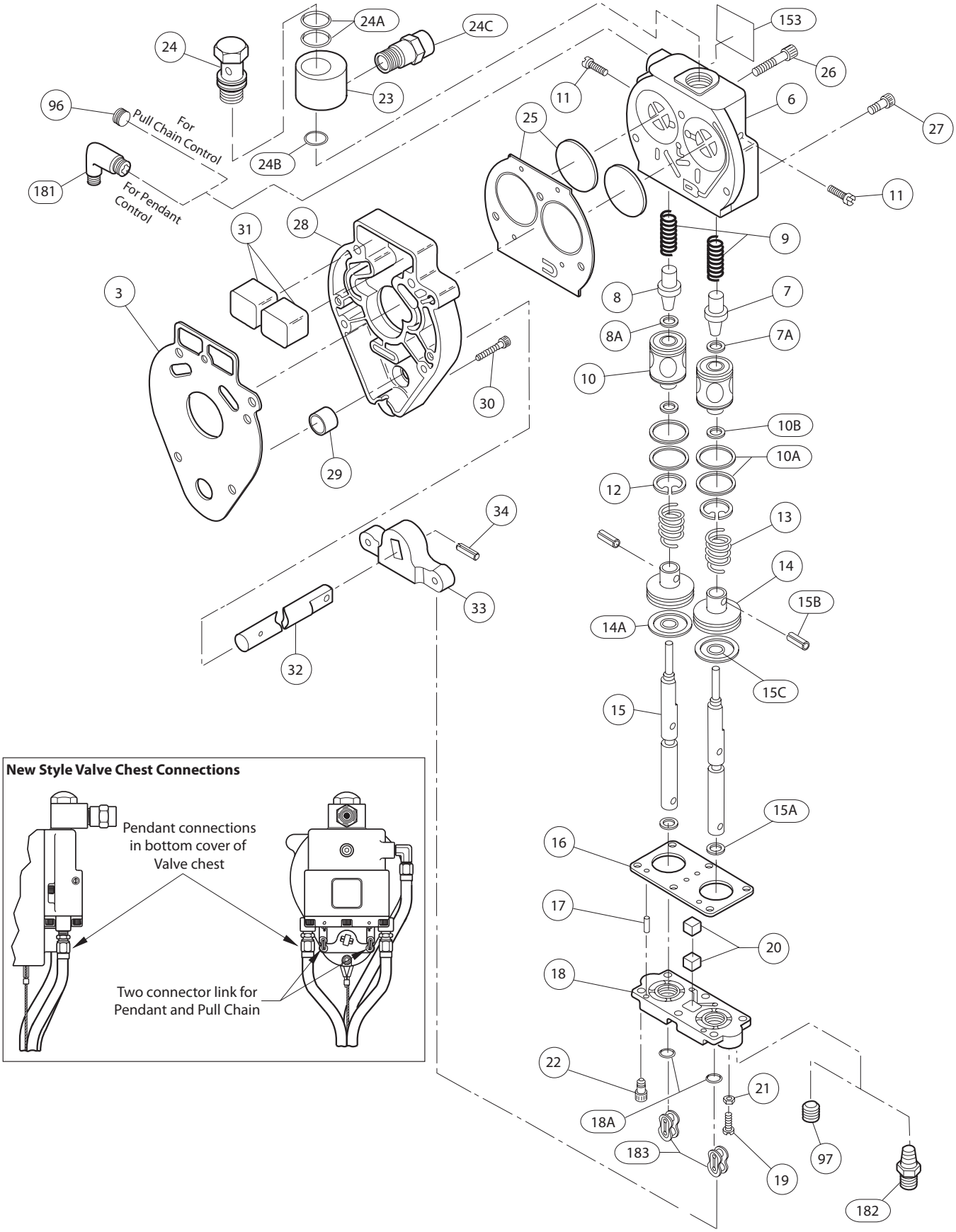

(Dwg. TPA 958-1)

HOIST VALVE CHEST ASSEMBLY PARTS LIST

ITEM No.	DESCRIPTION OF PART	QTY	PART NO.	ITEM No.	DESCRIPTION OF PART	QTY	PART NO.
3	Housing Gasket	1	ML50K-445	22	Valve Chest Cover Screw	6	MLK-240
---	Valve Chest Assembly	1	MLK-A545B	---	Swivel Inlet Assembly	1	MLK-B4
6	Valve Chest	1	MLK-545A	23	Inlet Body	1	MLK-166
• 7	Up Valve Assembly	1	MLK-K102U	24	Inlet Stud	1	MLK-4A
• 7A	Up Valve Seal	1	MLK-211	• 24A	Swivel Inlet Seal	2	R4-210
8	Down Valve Assembly	1	MLK-K1102D	• 24B	Swivel Inlet Gasket	1	R18LF-21
• 8A	Down Valve Seal	1	MLK-211	24C	Inlet Strainer	1	MLK-82
9	Valve Spring	2	MLK-942A	• 25	Valve Chest Gasket	1 Set	MLK-928-80
10	Valve Seat Assembly	2	MLK-K615	26	Valve Chest Screw	1	518-104
• 10A	Valve Seat Seal	2	C321-606	27	Valve Chest Screw	2	R0H-354-4
• 10B	Valve Seat Shaft Seal	1	R000BR-210	28	Valve Chest Plate	1	HLK-549
11	Valve Seat Lock Screw	2	AF160-305	• 29	Throttle Lever Bearing	1	R38M-603
• 12	Valve Seat Retainer	2	MLK-218	30	Valve Chest Plate Screw	5	5080-638-4
13	Piston Spring	2	MLK-250A	31	Muffler	2	MLK-175
14	Piston Assembly	2	MLK-K246A	32	Throttle Shaft	1	MHLK-255
• 14A	Piston Seal	1	HLK-103	33	Limit Actuator (Old Style Hoists) *	1	MLK-251
15	Piston Shaft Assembly	2	MLK-K655A				
• 15A	Piston Shaft Seal	1	R0BR1C-283		Limit Actuator (New Style Hoist) *		MLK-251A
• 15B	Piston Retaining Pin	1	510-669A				
• 15C	'O' Ring	1	Y330-006	34	Limit Actuator Retaining Pin	1	WF171-15
16	Gasket	1	MLK-117A	96	Plug, Pipe (Pull Chain) **	1	R0H-377
17	Pin	2	MLK-241	97	Plug, Vent (Pull Chain) **	2	P250-546
18	Cover Assembly	1	MLK-A238A	153	Ingersoll Rand Logo	1	HRA20A-201
• 18A	Valve Chest Cover Seal	2	R000BR-210	181	Fitting, Elbow (Pendant) **	1	UWD-161
19	Bleed Adjustment Screw	2	MLK-370	182	Fitting, Nipple (Pendant) **	2	MLK-165
20	Muffler	2	MLK-236	183	Link	2	MLK-224
21	Adjustment Screw Locknut	2	Q1-121				

• Recommended Spare

Repair and Conversion Kits

---	Valve Chest Repair Kit For New Style Hoist* only.	1	MLK-VCK1	Includes items 7A, 8A, 9, 10A, 10B, 12, 13, 14A, 15A, 15B, 16, 17, 18A, 24A, 24B, 24C, 25 and 183.
---	Overhaul Gasket Kit for all HLK Hoists (numbers in paranthesis are for Old Style Hoist valve chest parts)	1	HLK-K445	Includes items 3, 7A, 8A, 10A, 10B, 12, 14A, 15A, 15B, 18A (335), 24A, 24B, 25, 34, 36, 39, 'O' ring for 49, 51, 53, 63B, 64, 65, 66, 75, 76, 77, 84, 85, 105, 109, 114, 119, 130, 138, 144, 162, 164, 180, 183 and (331).

* New Style Hoist refererences apply to hoists with second letter of the serial number other than A through G or with second and third letters other than HA, HB, or HC.
Old Style Hoist refererences apply to hoists with second letter of the serial number A through G or with second and third letters HA, HB, or HC.

** Pull Chain Conversion Kit (MLK-K415) provides items 94 through 98 to convert hoist to pull chain operation. Items 33, 181, 182 and attached pendant (including control hoses) are replaced by this conversion. Order Pull Chain (93) separately. Refer to Dwg. MHP1065 parts list for detailed information.
Pendant Conversion Kit (MLK-AL269C) includes all components necessary to convert a pull chain throttle hoist to pendant control operation used on MLK, MLKR, HLK and HLKR hoists. Items 93 through 98 are replaced by this conversion. Length of pendant hose must be specified when ordering. Pendant length is normally 5 ft (1.5 m) shorter than lift. Refer to Dwg TPA0882-3 for additional pendant information.

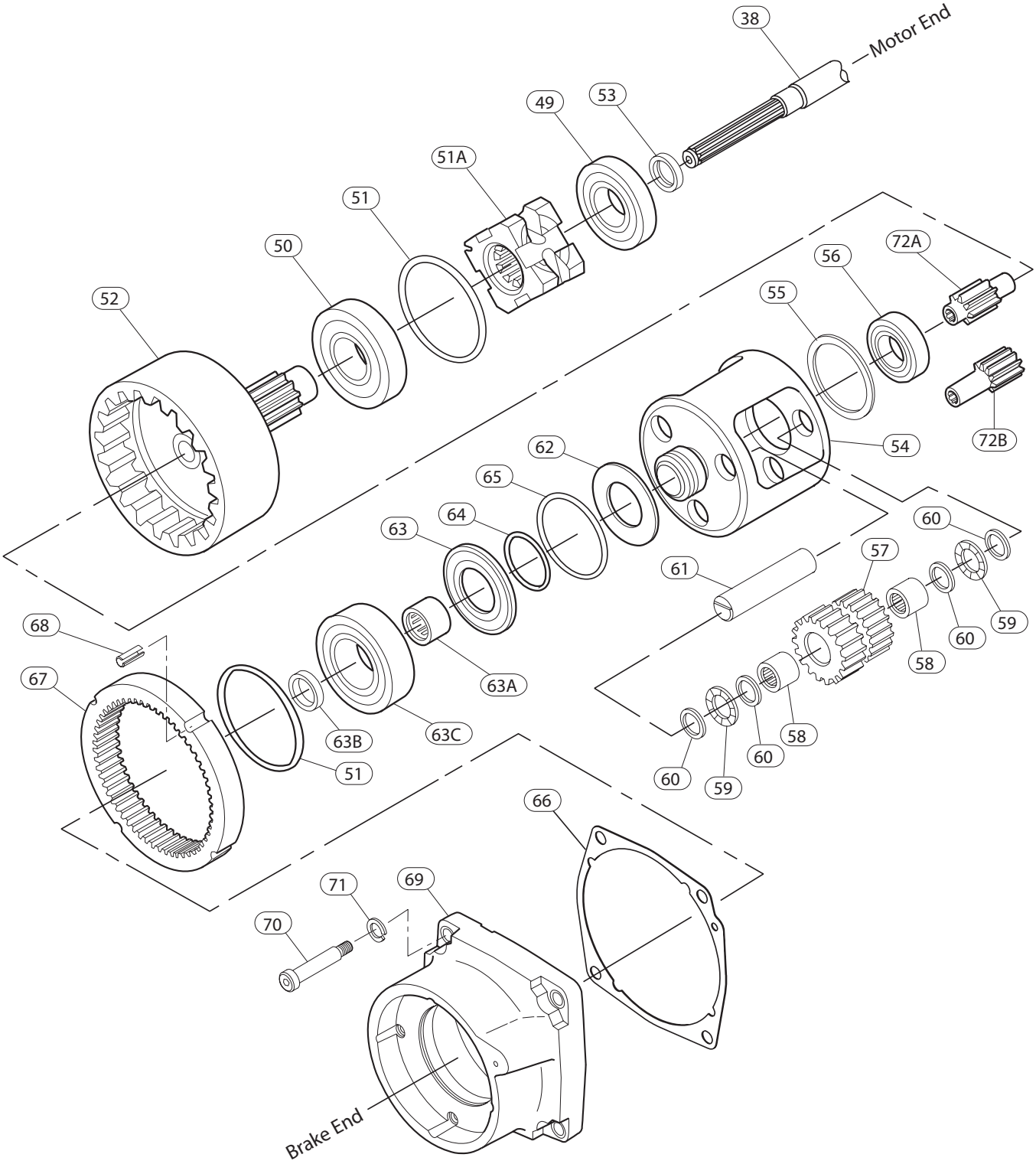
38
Motor End
49
53
51A
51
50
52
56
72A
55
54
72B
62
65
64
63
60
57
61
59
60
58
68
67
63A
63B
63C
51
58
60
60
59
66
71
69
70
Brake End

(Dwg.TPB 705-2)

HOIST GEARING ASSEMBLY PARTS LIST

ITEM No.	DESCRIPTION OF PART	QTY	PART NO.	ITEM No.	DESCRIPTION OF PART	QTY	PART NO.
38	Motor Shaft	1	HLK-316	63A	Brake Driver Bearing	1	182A83-606
49	Housing Bearing	1	HRA20A-987	63B	Brake Driver Seal	1	HLK-137
50	Ring Gear Bearing	1	HLK-97	63C	Planet Frame Bearing	1	HLK-97
• 51	'O' Ring	2	HLK-21	64	Planet Frame Spacer	1	R2C-103
51A	Chain Wheel (Powered)	1	HLK-740	65	Planet Frame Seal	1	HLK-103
52	Ring Gear	1	HLK-798	• 66	Gear Case Gasket	1	HLK-31
• 53	Seal	1	HLK-457	67	Fixed Ring Gear	1	HLK-406
---	Planet Frame Assembly	1	HLK-AP8	68	Ring Gear Pin	4	HLK-20
54	Planet Frame	1	HLK-8	69	Gear Case Cover	1	HLK-353
55	Planet Frame Spacer	1	HLK-645	70	Gear Case Screw	4	21-702
56	Planet Frame Bearing	1	HLK-96	71	Lockwasher	4	UW50A30-58
57	Planet Gear Assembly	3	HLK-A10	• 72A	Pinion Gear		
58	Gear Bearing	6	182A83-606		For HL1500K,	1	HLK-319-12
59	Gear Thrust Bearing	6	R02W-696		HL3000K, HL4500K		
60	Gear Thrust Race	12	CE210-603		and HL6000K		
61	Planet Shaft	3	HLK-191	• 72B	Pinion Gear		
62	Planet Frame Retainer	1	HLK-39		For HL1000K,	1	HLK-319-15
• 63	Oil Slinger	1	HLK-974		HL1000KR and HL2000K		

• Recommended Spare

HOIST BRAKE ASSEMBLY PARTS DRAWING

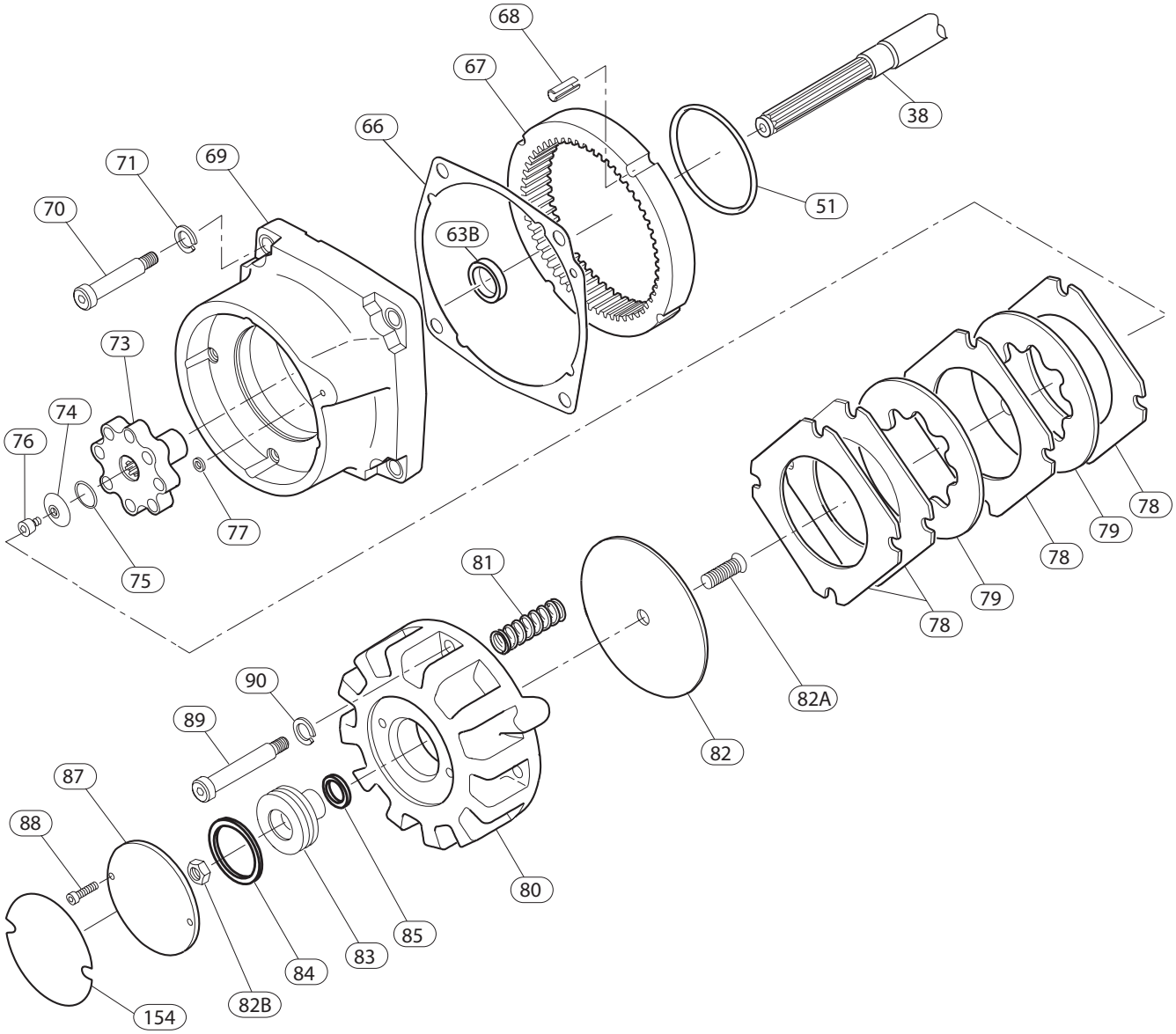

(Dwg.MHP 704-3)

HOIST BRAKE ASSEMBLY PARTS LIST

ITEM No.	DESCRIPTION OF PART	QTY	PART NO.	ITEM No.	DESCRIPTION OF PART	QTY	PART NO.
38	Motor Shaft	1	HLK-316	81	Spring	3	MLK-832
• 51	O-Ring	2	HLK-21	82	Pressure Plate	1	ML50K-K338A
63B	Brake Driver Seal	1	HLK-137	82A	Pressure Plate Screw	1	ML50K-805A
• 66	Gear Case Gasket	1	HLK-31	82B	Piston Nut	1	ML50K-394
67	Fixed Ring Gear	1	HLK-406	83	Piston	1	ML50K-A809
68	Ring Gear Pin	4	HLK-20	• 84	Piston Large Seal	1	R2C-103
69	Gear Case Cover	1	HLK-353	• 85	Piston Small Seal	1	MLK-210
70	Gear Case Screw	4	21-702	87	Plate	1	ML50K-981
71	Lockwasher	4	UW50A30-58	88	Plate Screw	2	CE110-354
• 73	Brake Driver	1	ML50K-842	89	Shoulder Bolt	4	HLK-7
74	Brake Seal Retainer	1	HLK-639	90	Lockwasher (Qty. 10/pack)	1 Pack	D02-321-10
• 75	Brake Seal	1	R18L-14	154	Capacity Labels		
• 76	Retainer Screw	1	HLK-640		HL1000K and HL1000KR (1 ton)	1	ML100K-99
• 77	'O' Ring (Air Port)	1	PS3-67		HL1500K (1-1/2 ton)		HL1500K-99
78	Brake Plate	4	ML50K-834A		HL2000K (2 ton)		HL2000K-99
• 79	Brake Disc	2	ML50K-855A		HL3000K (3 ton)		HL3000K-99
---	Brake Spring and Piston Housing Assembly	1	MLK-A395A		HL4500K (4-1/2 ton)		HL4500K-99
					HL6000K (6 ton)		HL6000K-99
80	Spring and Piston Housing	1	ML50K-395A				

•	Recommended Spare

Repair and Conversion Kits

---	Brake Repair Kit	1	MLK-ABK1	Includes items 79, 81, 84 and 85.
---	Manual Brake Release Kit	1	MLK-K390	Includes all components for a manual release brake and/or 200% brake capability.

MOTOR ASSEMBLY DRAWING

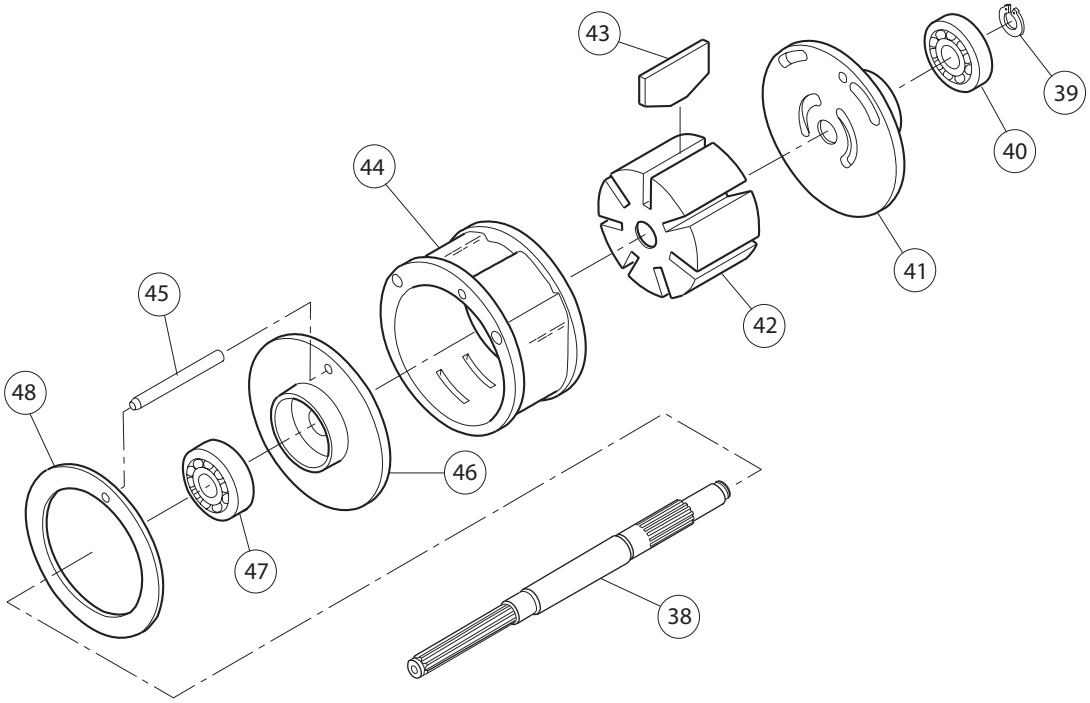

(Dwg.TPB703-3)

MOTOR ASSEMBLY PARTS LIST

ITEM No.	DESCRIPTION OF PART	QTY	PART NO.	ITEM No.	DESCRIPTION OF PART	QTY	PART NO.
---	Motor Assembly	1	HLK-A53	• 43	Vane Packet	set of 7	MR-42-7
38	Motor Shaft	1	HLK-316	44	Cylinder	1	MR-3A
39	Motor Shaft Rear Retainer Ring	1	MLK-120	45	Cylinder Dowel	1	R3H-434
• 40	Rear End Plate Bearing	1	R2-24	46	Front End Plate	1	MR-11
41	Rear End Plate	1	MR-12	• 47	Front End Plate Bearing	1	TB-394
42	Rotor	1	MR-53	48	Motor Retainer Washer	1	MR-207

• Recommended Spare

TOP LUG ASSEMBLY DRAWING AND PARTS LIST

RIGID TROLLEY MOUNT

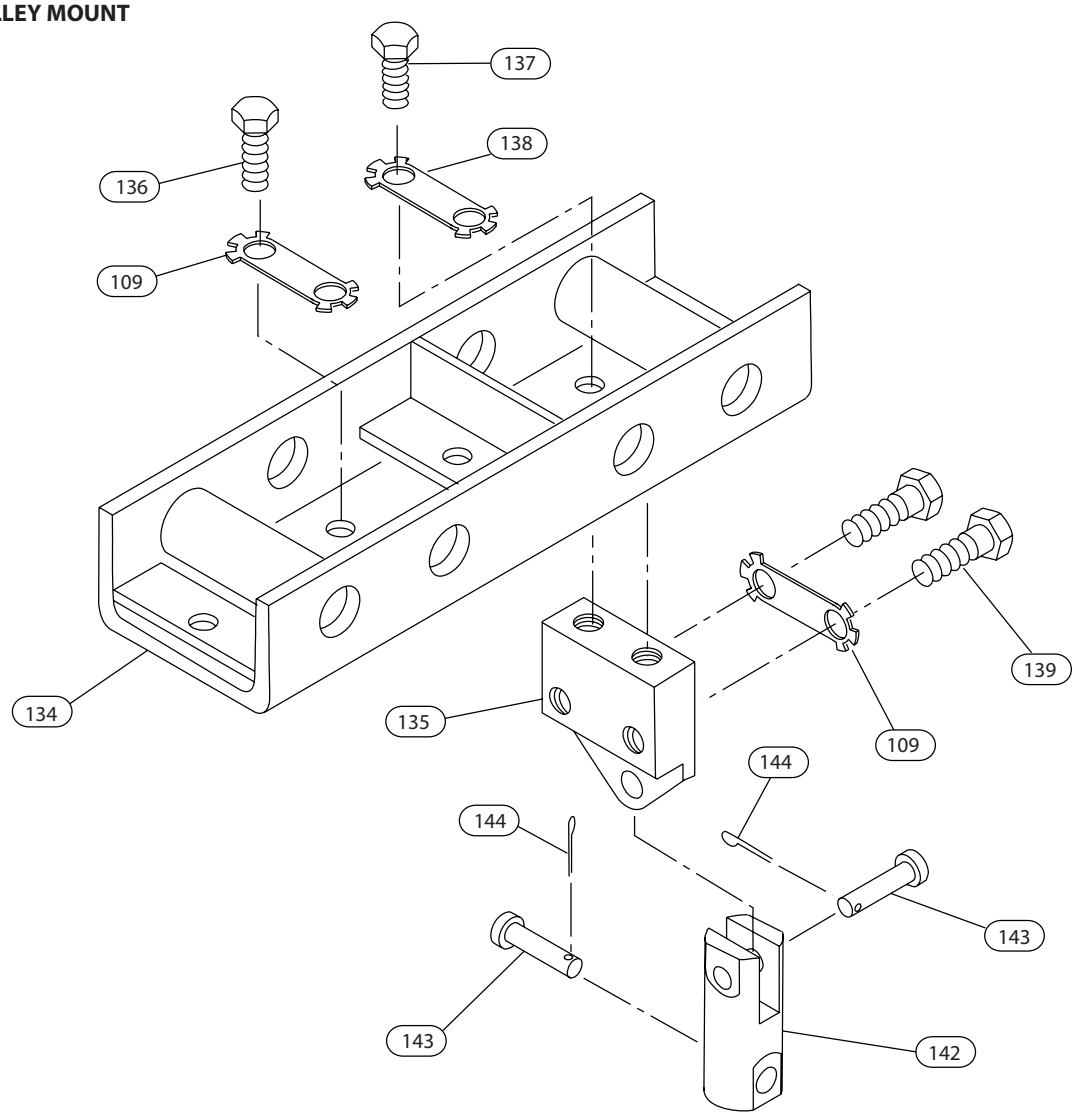

(Dwg.TPC449-3)

ITEM No.	DESCRIPTION OF PART	QTY	PART NO.		
			HL1000K/ HL1000KR	HL1500K	HL2000K/HL3000K HL1000KR
	Top Lug Kit	1	HLK-K444A		HL3000K-K444A
• 109	Locking Tab	2	HLK-322		
134	Lug Block	1	HLK-444A		
135	Lug Mounting Block	1	**HLK-425**		
136	Bolt (1.5 inch long)	2	215-36		
137	Bolt (1.25 inch long)	2	215-13		
• 138	Locking Tab	1	HLK-323		
139	Bolt (2.25 inch long)	2	215-22		
142	Chain Anchor	1	---		HLK-373
143	Pin	2	---		HLK-962
• 144	Cotter Pin	2	---		D02-330

•	Recommended Spare

Note 1: Torque bolts (items 136, 137 and 139) to between 75 and 125 ft lbs (100 and 170 Nm).
Note 2: The head of pin (item 143) must be located on the motor side of the chain anchor (item 142).

Top Hook and Yoke Assembly for HL1000K, HL1000KR and HL1500K

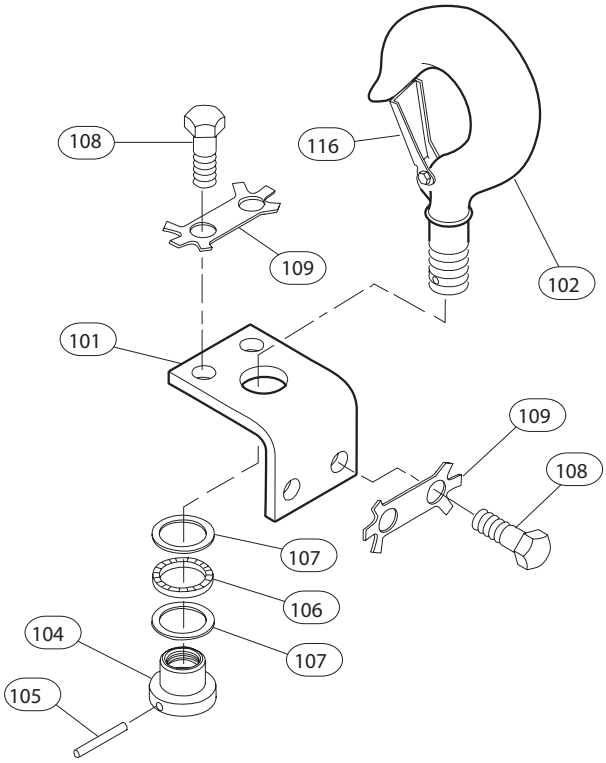

Bottom Hook and Block Assembly for HL1000K and HL1500K

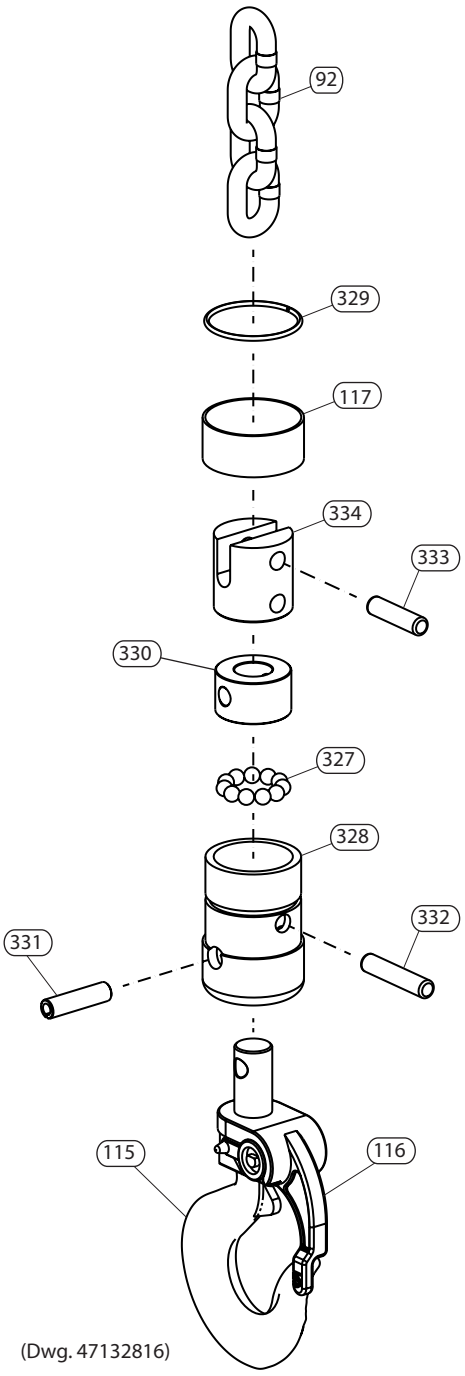

(Dwg. 47132816)

Bottom Hook and Block Assembly for HL1000KR

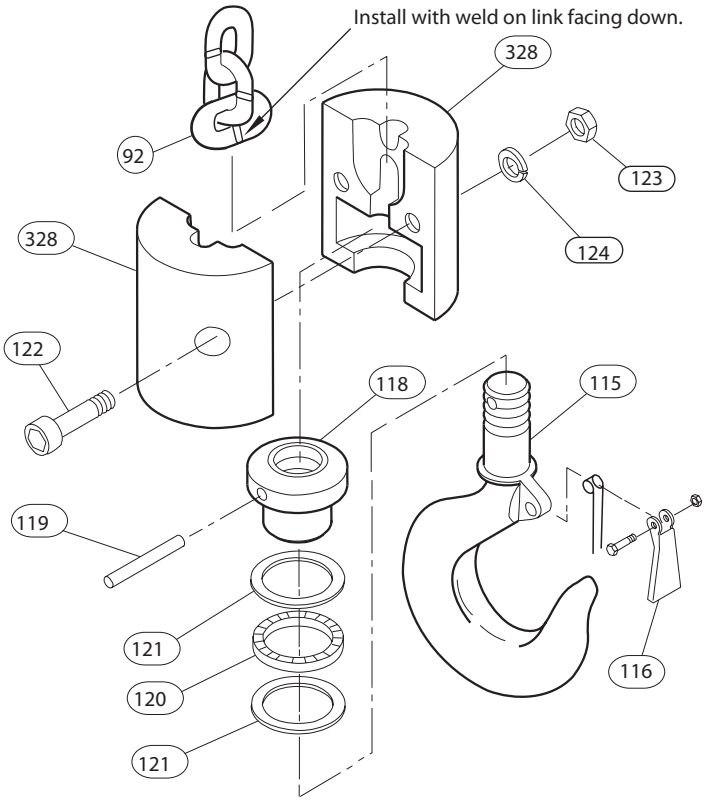

(Dwg. MHP1105)

HL1000K, HL1000KR AND HL1500K HOOK ASSEMBLY PARTS LIST

ITEM No.	DESCRIPTION OF PART	QTY	PART NO.		
			HL1000K and HL1500K		HL1000KR
Load Chain:					
92	Load Chain (Zinc Plated)	Specify Length in Feet	H745Z		---
	Load Chain (Stainless Steel)		---		H745S
Top Hook:			**Standard Steel**	**Bullard Burnham**	**Bronze**
---	Top Hook Assembly	1	HLK-K590	HLK-KBB590	HLK-KR590A
101	Yoke	1	HL1500K-590		
108	Capscrew	4	215-36		
• 109	Locking Tab	2	HLK-322		
---	Hook and Nut Assembly	1	HLK-AS377	HLK-ABB377	---
104	Hook Nut	1	HLK-305		
102	Hook and Latch	1	HLK-S377	HLK-BB377	HL1500K-SR377N
• 116	Latch Kit	1	35023	---	D02-S4055N
• 105	Pin	1	C6H20A-826		
• 106	Bearing	1	HRA60A-379		
• 107	Bearing Washer	2	HLK-465		
Bottom Hook:			**Standard Steel**	**Bullard Burnham**	**Bronze**
---	Bottom Hook & Block Assembly	1	HLK-K463	HLK-KBB463	HLK-KR463A
115	Hook Assembly	1	34337	35200	HL1500K-SR377N
• 116	Latch Kit	1	35023	---	D02-S4055N
330	Collar**	1	34321		---
328	Bucket** / Hook Block	1 / 2	43019		HLK-R463
332	Dowel Pin**	1	43702-2		---
333	Dowel Pin**	1	43702-1		---
334	Connector**	1	43028		---
329	Ring**	1	42999		---
117	Sleeve**	1	42998		---
331	Pin**	1	Y178-122		---
327	Ball**	11	Y16-10		---
122	Capscrew (Qty. 4 per pack)	1 Pack	---		834-638-4
123	Nut	2	---		D02-428
124	Lockwasher (Qty. 10 per pack)	1 Pack	---		34U-58-10
118	Hook Nut	1	---		HLK-305
• 119	Pin	1	---		C6H20A-826
• 120	Bearing	1	---		HRA60A-379
• 121	Bearing Washer	2	---		HLK-465

• Recommended Spare

** Used on HL1000K & HL1500K hoists produced after 4/1/2010.

Top hook and Yoke Assembly for Models HL2000K and HL3000K

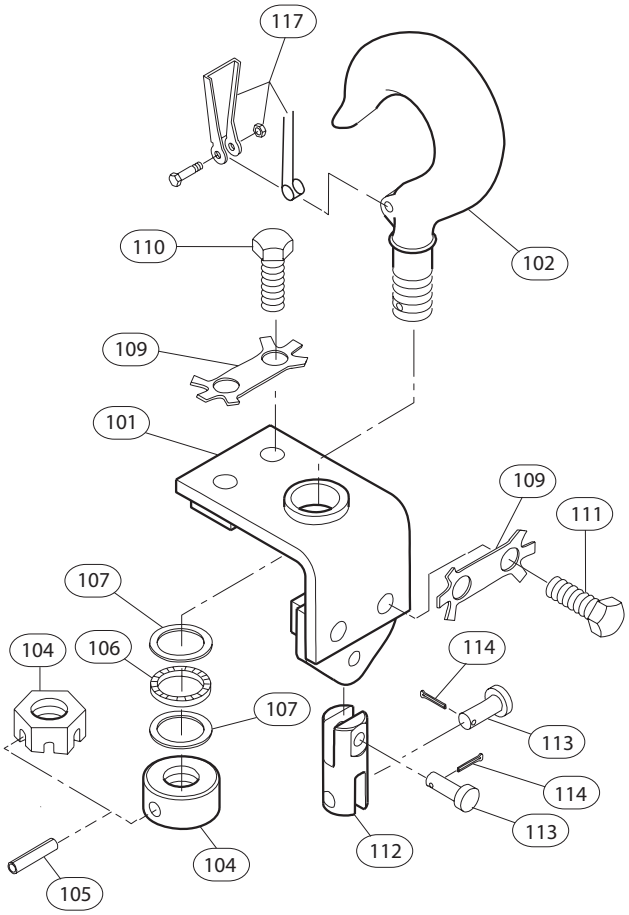

Bottom hook and Block Assembly for Models HL2000K and HL3000K

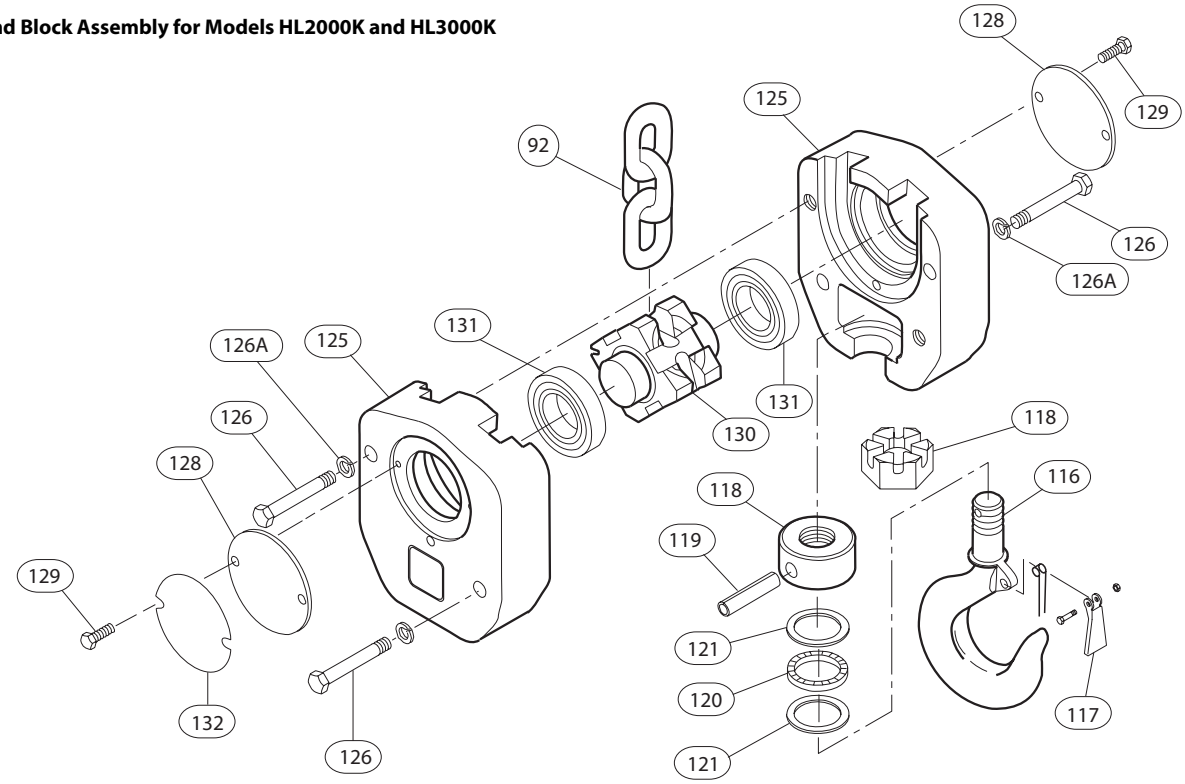

(Dwg. MHP1106)

HL2000K AND HL3000K HOOK ASSEMBLY PARTS LIST

ITEM No.	DESCRIPTION OF PART	QTY	PART NO.					
			HL2000K			HL3000K		
Load Chain:								
92	Load Chain (Zinc Plated)	Specify Length in Feet	H745Z					
Top Hook:			**Standard**	**Bullard Burnham**	**Bronze**	**Standard**	**Bullard Burnham**	**Bronze**
---	Top Hook Assembly	1	HL2000K-K590			HL3000K-K590		
101	Yoke	1	HL3000K-590					
• 109	Locking Tab	2	HLK-322					
110	Capscrew (1.5 in)	2	215-22					
111	Capscrew (2.75 in)	2	HU40-775					
112	Chain Anchor	1	HLK-373					
113	Pin	2	HLK-962					
*114	Cotter Pin	2	D02-330					
---	Hook and Nut Assembly	1	HL2000K-AS377	HL2000K-ABB377	HL2000K-ASR377	HL3000K-AS377	HL3000K-ABB377	HL3000K-ASR377
102	Hook and Latch	1	HL2000K-377	HL2000K-BB377	HL2000K-SR377N	HL3000K-S377	HL3000K-BB377	HL3000K-SR377N
• 117	Latch Kit	1	D04-S4055N	---	45666872	45666880	---	D04-S4055N
104	Hook Nut	1	HL2000K-305A		HL3000K-305			
104A	Hook Nut Spacer **	1	HL2000K-306		---			
• 105	Pin	1	D660A-376					
• 106	Bearing	1	CE110-295					
• 107	Bearing Washer	2	HL3000K-465					
Bottom Hook:			**Standard**	**Bullard Burnham**	**Bronze**	**Standard**	**Bullard Burnham**	**Bronze**
---	Bottom Hook Assembly	1	HL2000K-K378			HL3000K-K378		
125	Hook Block	2	HLK-378					
126	Capscrew	4	AHC68-22					
126A	Lockwasher	4	UW50A30-58					
128	Plate	2	ML50K-981					
129	Screw	4	AF160-305					
130	Idler Chain Wheel	1	HLK-380					
• 131	Bearing	2	BU-359					
132	Load Label	2	HL2000K-99			HL3000K-99		
---	Hook and Nut Assembly	1	HL2000K-AS377	HL2000K-ABB377	HL2000K-ASR377	HL3000K-AS377	HL3000K-ABB377	HL3000K-ASR377
116	Hook and Latch	1	HL2000K-377	HL2000K-BB377	HL2000K-SR377N	HL3000K-S377	HL3000K-BB377	HL3000K-SR377N
• 117	Latch Kit	1	D04-S4055N		45666872	45666880		D04-S4055N
118	Hook Nut	1	HL2000K-305A		HL3000K-305			
118A	Hook Nut Spacer **	1	HL2000K-306		---	---	---	---
• 119	Pin	1	D660A-376					
• 120	Bearing	1	CE110-295					
• 121	Bearing Washer	2	HL3000K-465					

•	Recomended Spare
**	Not shown on drawing.

HL4500K UPPER SUSPENSION AND TOP HOOK ASSEMBLY

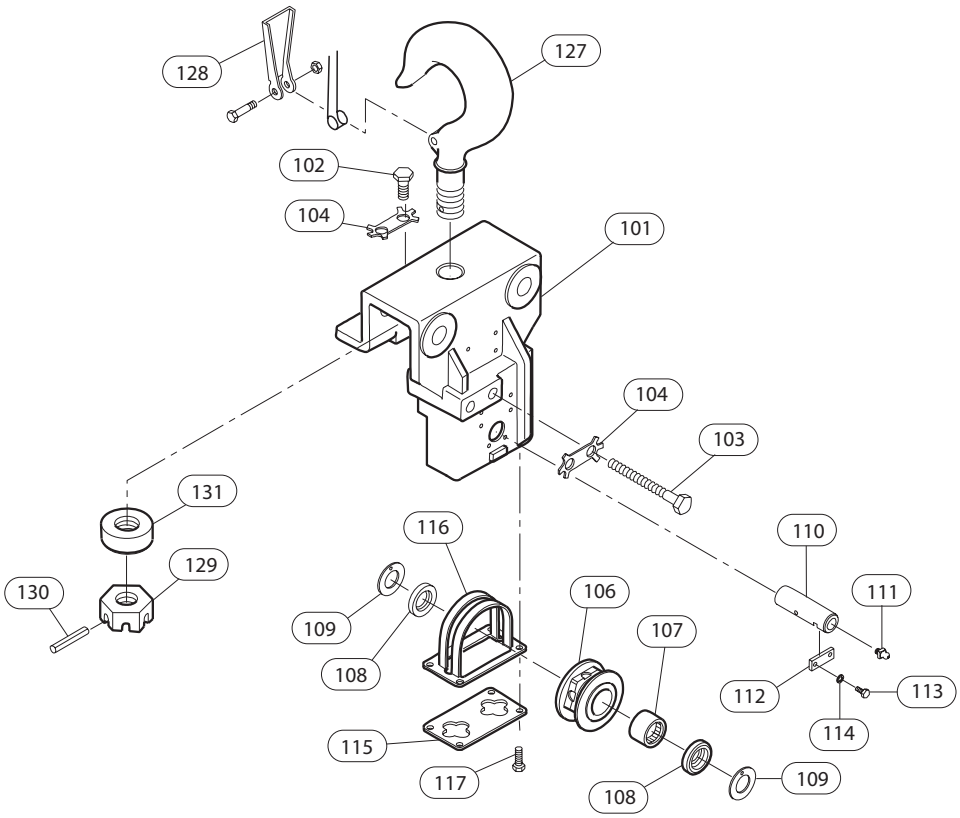

HL4500K BOTTOM HOOK ASSEMBLY

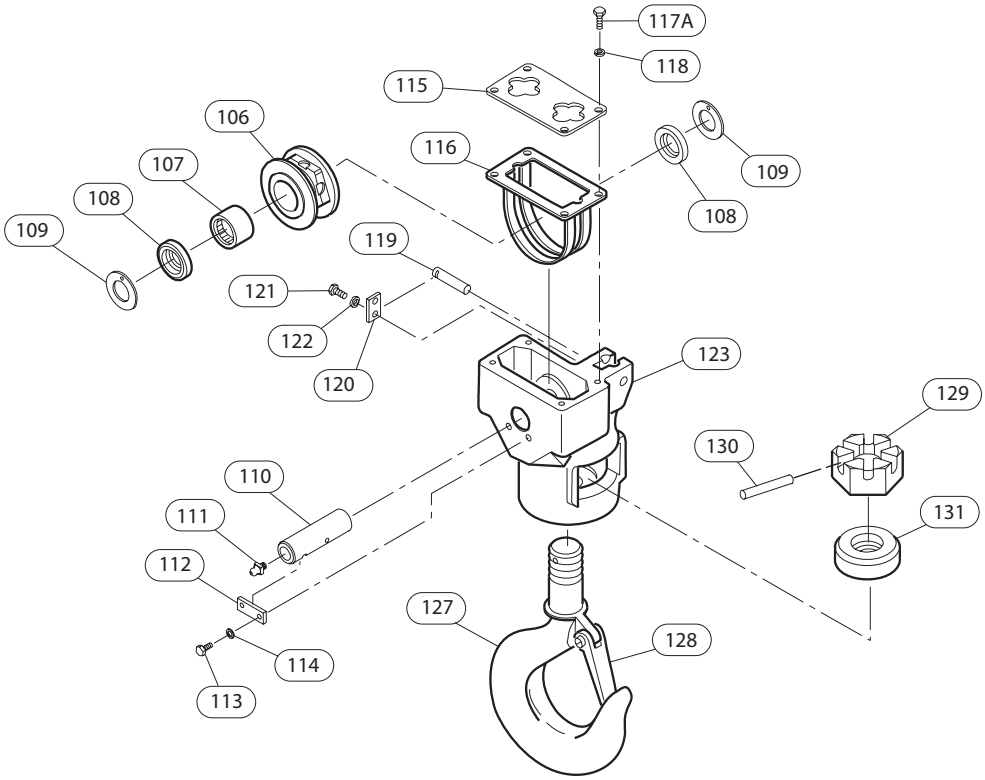

(Dwg.TPA1041)

HL4500K HOOK ASSEMBLY PARTS LIST

ITEM NO.	DESCRIPTION OF PART	QTY.	PART NO.		
			Standard	Bronze	Bullard Burnham
101	Upper Suspension Housing	1	HL4500K-590		
102	Capscrew	2	KX-36		
103	Capscrew	2	D01-339		
104	Tab Washer	2	HLK-322		
106	Idler Wheel Assembly	2	HL6000K-A380		
107	Idler Wheel Bearing	1	48NB-765		
108	Idler Wheel Seal	2	C6H20A28-754		
109	Idler Wheel Thrust Washer	2 each Idler Wheel	HL6000K-974		
110	Idler Wheel Shaft	1 each Idler Wheel	HL6000K-382		
111	Wheel Shaft Grease Fitting	1 each Shaft	R1-188		
112	Wheel Shaft Lockplate	1 each Shaft	MR20-383		
113	Capscrew	2 each Lockplate	JC3350-103		
114	Lockwasher	2 each Lockplate	L01-67-10		
115	Idler Wheel Cover	1 each Idler Wheel	HLK-441		
116	Idler Wheel Chain Guard	1 each Idler Wheel	HLK-445		
117	Capscrew	4 Upper Idler Wheel	R2N-103		
117A	Capscrew	4 Lower Idler Wheel	R3-7-4		
118	Lockwasher	4 Lower Idler Wheel	L01-67-10		
119	Chain Anchor Pin	1	HL6000K-962		
120	Anchor Pin Lockplate	1	HL6000K-462		
121	Capscrew	2	JC3350-103		
122	Lockwasher	2	L01-67-10		
123	Lower Hook Block	1	HL4500K-378		

Top and Bottom Hook:					
---	Top and Bottom Hook Assembly	1-Lug Mount	HL4500K-AS377	HL4500K-ASR377	HL4500K-ABB377
		2-Hook Mount			
127	Hook	1	HL4500K-377	HL4500K-SR377N	HL4500K-BB377
• 128	Latch Kit	1	45666880	D10-S4055N	---
129	Hook Nut	1	HL4500K-305		
130	Hook Pin	1	D660A-376		
131	Hook Thrust Bearing	1	HL4500K-379		

•	Recommended Spare

HL6000K UPPER SUSPENSION AND TOP HOOK ASSEMBLY

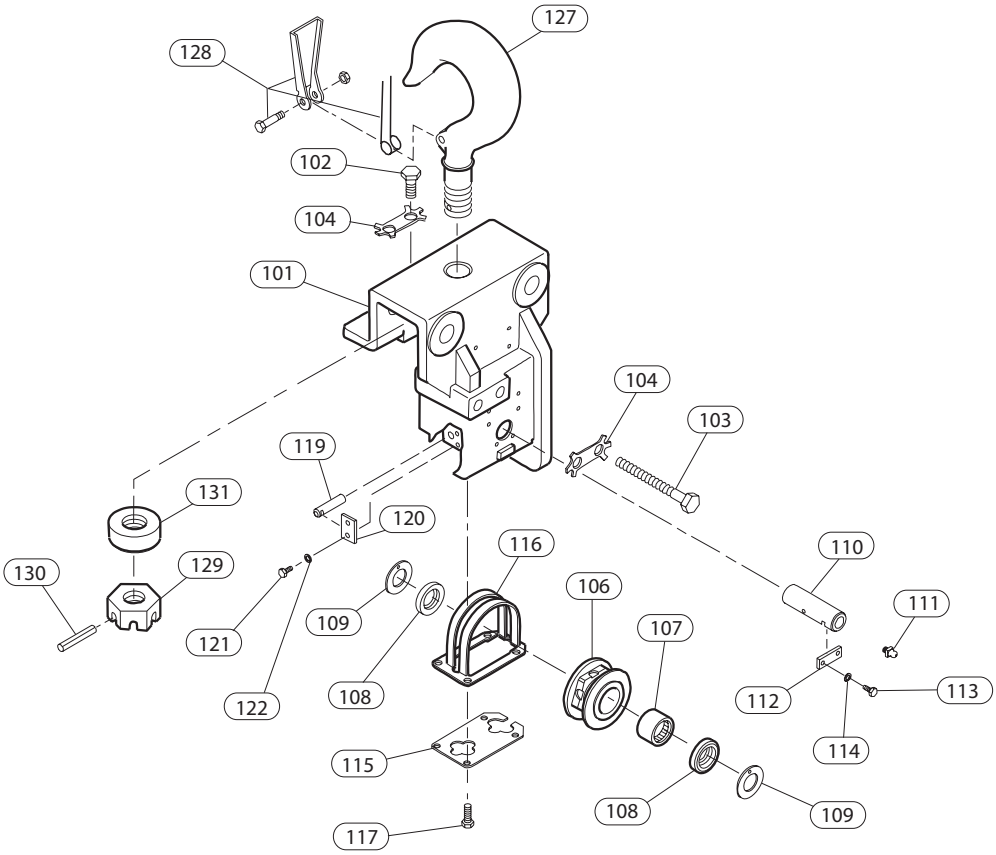

HL6000K BOTTOM HOOK ASSEMBLY

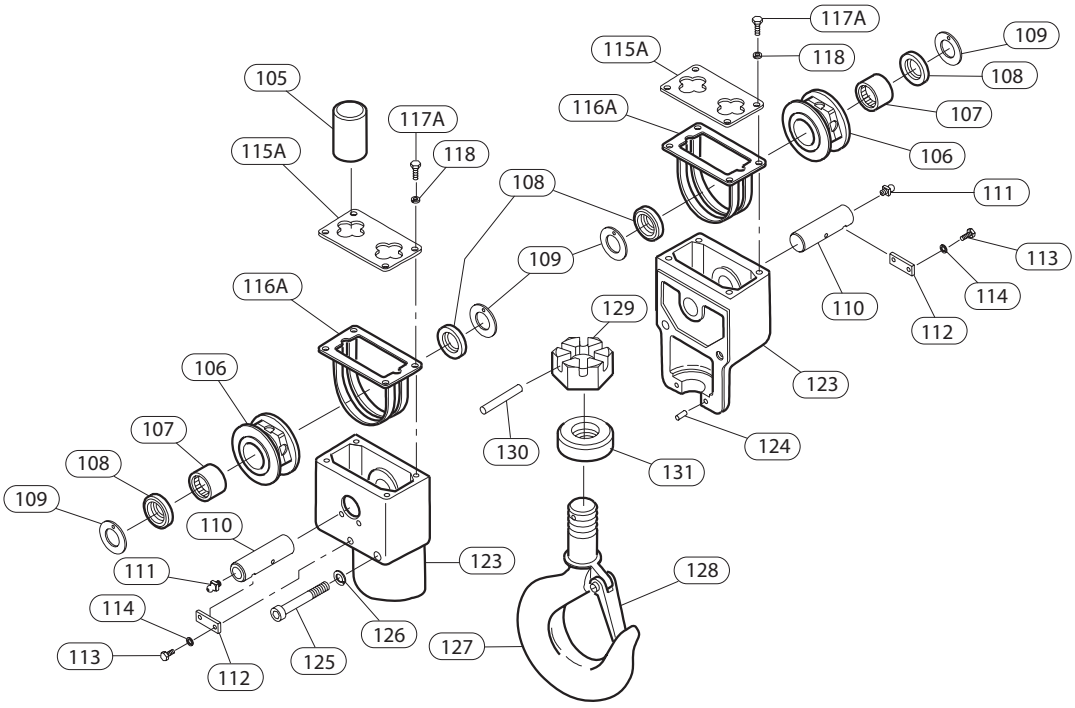

(Dwg.TPA1040)

HL6000K HOOK ASSEMBLY PARTS LIST

ITEM NO.	DESCRIPTION OF PART	QTY.	PART NO.		
			Standard	Bronze	Bullard Burnham
101	Upper Suspension Housing	1	HL6000K-590		
102	Capscrew	2	KX-36		
103	Capscrew	2	D01-339		
104	Tab Washer	2	HLK-322		
105	Limit Stop Tube	1	HL6000K-259		
106	Idler Wheel Assembly	3	HL6000K-A380		
107	Idler Wheel Bearing	1 each Idler Wheel	48NB-765		
108	Idler Wheel Seal	2 each Idler Wheel	C6H20A28-754		
109	Idler Wheel Thrust Washer	2 each Idler Wheel	HL6000K-974		
110	Idler Wheel Shaft	1 each Idler Wheel	HL6000K-382		
111	Wheel Shaft Grease Fitting	1 each Shaft	R1-188		
112	Wheel Shaft Lockplate	1 each Shaft	MR20-383		
113	Capscrew	2 each Lockplate	JC3350-103		
114	Lockwasher	2 each Lockplate	L01-67-10		
115	Idler Wheel Cover (Upper Hook)	1 each Idler Wheel	HL6000K-441		
115A	Idler Wheel Cover (Bottom Hook)		HLK-441		
116	Idler Wheel Chain Guard (Upper Hook)	1 each Idler Wheel	HL6000K-445		
116A	Idler Wheel Chain Guard (Bottom Hook)		HLK-445		
117	Capscrew	4 Upper Idler Wheel	R2N-103		
117A	Capscrew	8 Lower Idler Wheel	R3-7-4		
118	Lockwasher	8 Lower Idler Wheel	L01-67-10		
119	Chain Anchor Pin	1	HL6000K-962		
120	Anchor Pin Lockplate	1	HL6000K-462		
121	Capscrew	2	JC3350-103		
122	Lockwasher	2	L01-67-10		
123	Lower Hook Block	2	HL6000K-378		
124	Pin	2	JC3350-74		
125	Capscrew	2	HLK-638		
126	Lockwasher	2	HRA20A-322		
Top and Bottom Hook:					
---	Top and Bottom Hook Assembly	1-Lug Mount	HL6000K-AS377	HL6000K-ASR377	HL6000K-ABB377
		2-Hook Mount			
127	Hook		HL6000K-377	Order complete hook assembly	
• 128	Latch Kit		45666898	HL6000K-SR4055N	---
129	Hook Nut		D10-305B		
130	Hook Pin		D6100A-376		
131	Hook Thrust Bearing		D10-379A		

• Recommended Spare

PENDANT ASSEMBLY PARTS DRAWING

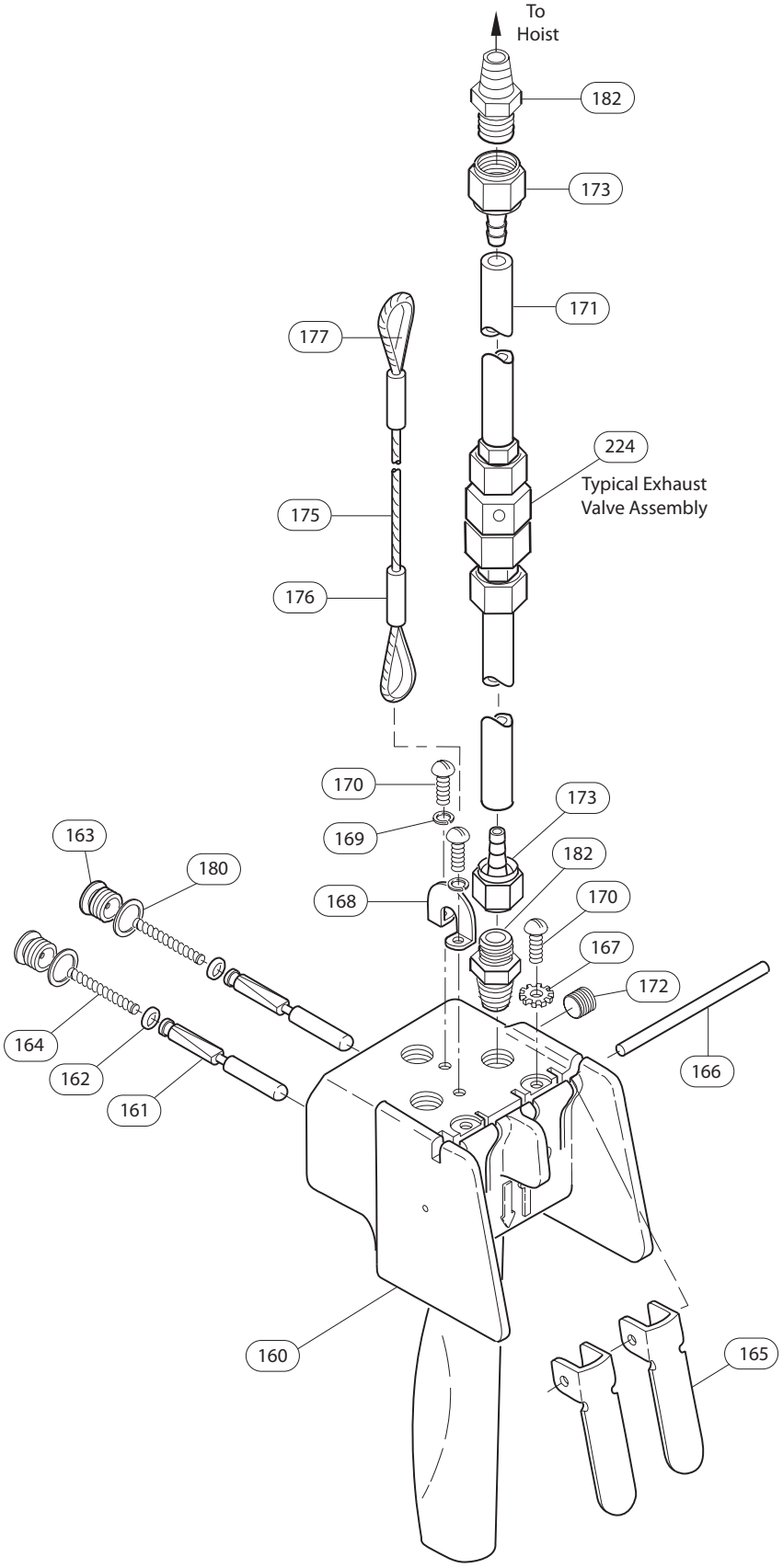

(Dwg.TPA0882-3)

PENDANT ASSEMBLY PARTS LIST

ITEM No.	DESCRIPTION OF PART	QTY	PART NO.
---	Pendant Kit*	1	MLK-K269C
160	Pendant Assembly **	1	MLK-A269C
161	Pendant Throttle Valve	2	MLK-K264B
• 162	Valve Seal	2	R000BR1C-283
163	Valve Cap	2	MLK-K266A
• 164	Valve Spring	2	MLK-51A
165	Throttle Lever	2	MLK-273
166	Throttle Lever Pin	1	DLC-120A
167	Lockwasher	2	D02-138
168	Strain Relief Support	1	MLK-450
169	Lockwasher (Pack)	1	H54U-352-10
170	Handle Screw	4	HRE20A-68
171	Hose (specify length)	3	50923
172	Plug	1	502-95
173	Barbed Swivel Fitting	6	51029
---	Strain Relief Assembly (specify length)	1	MLK-LWR3A

ITEM No.	DESCRIPTION OF PART	QTY	PART NO.
175	Strain Relief Cable (specify length)	1	BWR3A
176	Clamping Sleeve (see note 3)	2	MLK-521
177	Clamping Thimble	2	MLK-602
• 180	Valve Cap Gasket	2	MLK-504
182	Fitting, Hose	5	MLK-165
224	Quick Exhaust Valve Assembly	***	20417
Parts Not Illustrated			
179	Warning Tag	1	71059612
218	Hose Tie (3 for standard hose; 2 additional each 5 ft hose)		HRE20A-283
---	Fitting, Elbow (supply air inlet)	1	UWD-161

•	Recommended Spare

Additional Pendants and Components:

Single Motor Pendant with Hose Kit	1	MLK-AL269C	Includes all components necessary to install complete pendant assembly. Specify hose length in feet (normally 4 ft (1.2 m) shorter than lift).
Two Motor Pendant		HRA-A122C	Two motor pendant without hose.
Three Motor Pendant		HRA-A132C	Three motor pendant without hose.
Two Motor Pendant (with hose)		MLK-AL122C	Two motor pendant with hose; specify hose length in feet.
Three Motor Pendant (with hose)		MLK-AL132C	Three motor pendant with hose; specify hose length in feet.

* Pendant Kit including items 161 through 173 and 176 through 182.
** Includes 161 through 172, 180 and 182.
*** Quantity of 2 required when hose length exceeds 20 ft (6 m); quantity of 4 required when hose length exceeds 50 ft (16 m).

Notes:
1. Refer to Form P6778 for additional information on pendant throttle handle assemblies.
2. On Old Style valve chests (hoists with the second letter of their serial number A through G or with second and third letters HA, HB, or HC) order (2) MLK-161 adapters. MLK-1671 is a 1/8 NPT to 7/16-20 elbow.
3. A crimping tool (Nicropress® Tool with groove size G) is required to install the clamping sleeves (176).

FABRIC CHAIN CONTAINER ASSEMBLY PARTS DRAWING

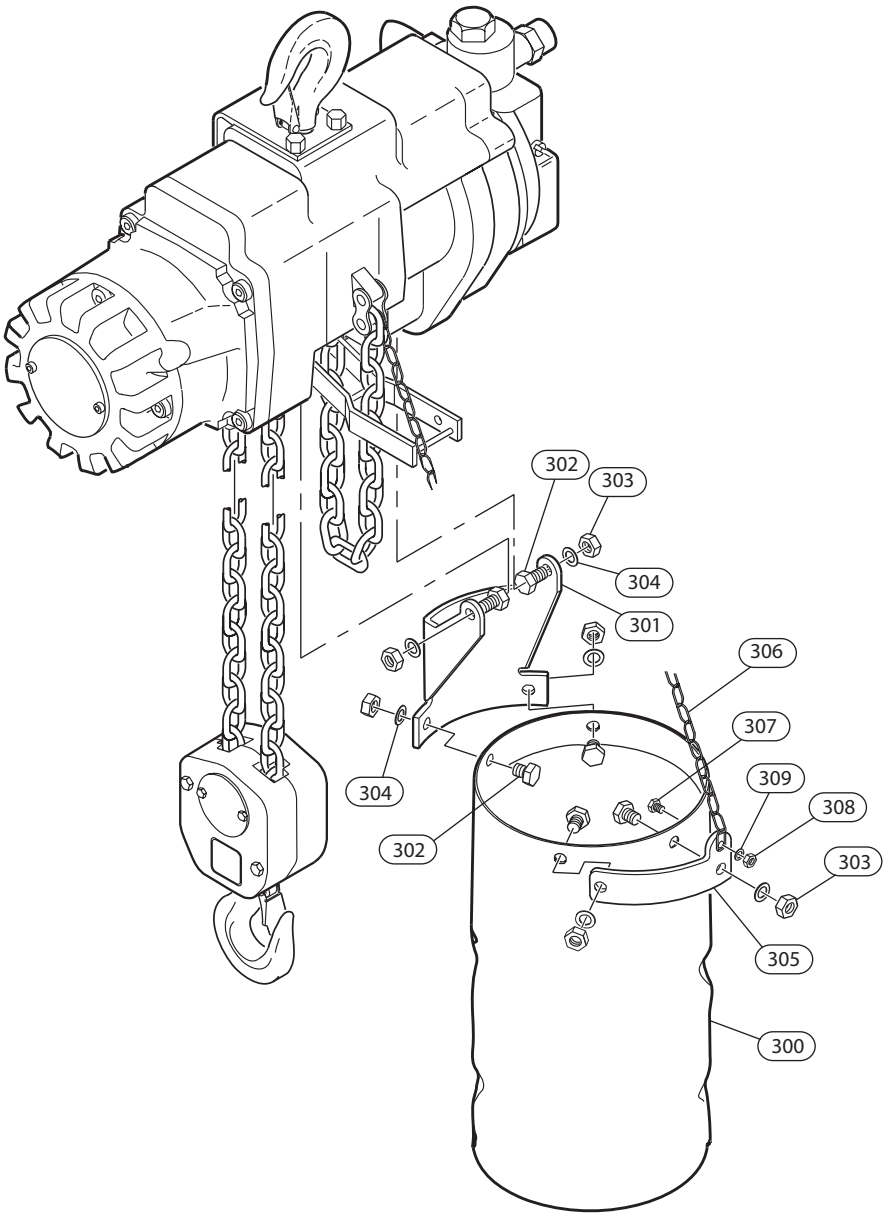

(Dwg.TPC451-3)

FABRIC AND METAL CHAIN CONTAINER ASSEMBLY PARTS LIST

ITEM NO.	DESCRIPTION OF PART	QTY. TOTAL	PART NO.
---	Fabric Chain Container Kit (single fall hoist capacity 20 ft [6 m] or on double fall hoist 10 ft [3 m])	1	HLK-K749-20
	Fabric Chain Container Kit (single fall hoist capacity 40 ft [12 m] or on double fall hoist 20 ft [6 m])		HLK-K749-40
	Metal Chain Container Kit (single fall hoist capacity 20 ft. [6 m] or on double fall hoist 10 ft. [3 m])		HLK-K750-20
	Metal Chain Container Kit (single fall hoist capacity 40 ft. [12 m] or on double fall hoist 20 ft. [6 m])		HLK-K750-40
300	Fabric Chain Container (20 ft [6 m] of chain capacity)	1	HLK-749-20
	Fabric Chain Container (40 ft [12 m] of chain capacity)		HLK-749-40
	Metal Chain Container (20 ft. [6 m] of chain capacity)		HLK-750-20
	Metal Chain Container (40 ft. [12 m] of chain capacity)		HLK-750-40
301	Mounting Bracket	1	HLK-748
302	Bracket Bolt	6	SP9-11B
303	Bracket Nut	6	551AMP61-428
304	Washer	6	B8-259
305	Support Bracket	1	HLK-747
306	Support Chain	1	HLK-240-7
307	Support Bracket Bolt	1	R3H-68A
308	Support Bracket Nut	1	HLK-751
309	Support Bracket Washer	1	R3-94

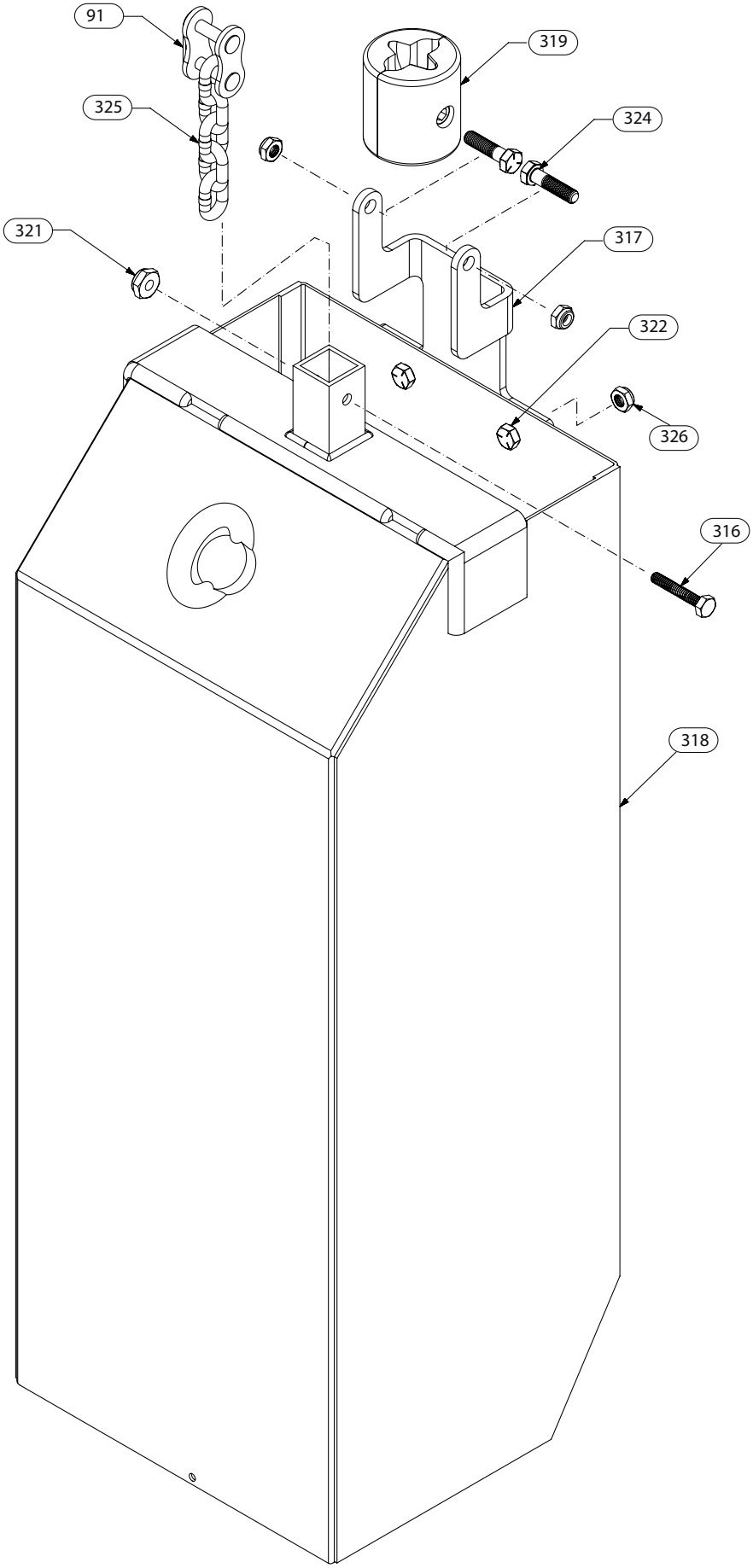

(Dwg. 10552230)

HLK-K750-85 METAL CHAIN CONTAINER ASSEMBLY PARTS LIST

ITEM NO.	DESCRIPTION OF PART	QTY. TOTAL	PART NUMBER
---	Metal Chain Container Kit (single fall hoist capacity 80 ft [24 m] or on double fall hoist 40 ft [12 m])		HLK-K750-85
316	Screw	1	10429
317	Bracket	1	04612115
318	Metal Chain Container (80 ft [24 m] of chain capacity)	1	10552222
319	Chain Stop	1	71273353
91	Link	1	HRA30A-646
321	Nut	1	75503
322	Bolt	2	10552248
324	Bolt	2	10552255
325	Chain Link	1	M745Z
326	Nut	4	Y109-524

Pendant Conversion Kit: Includes all components necessary to convert a pull chain throttle hoist to pendant control operation. Part No. MLK-AL269C (04307310) used on all MLK, MLKR, HLK and HLKR hoists. Length of pendant hose must be specified when ordering. Pendant length is normally 4 ft (1.2 m) shorter than lift.

Pull Chain Conversion Kit: Part No. MLK-K415 for use on all MLK and HLK hoists. Includes all components necessary, except the pull chains, to convert a pendant throttle hoist to pull chain control operation. Order pull chains separately. See below:
Part No. CA110-B240 (03457769) Pull chain for use on standard HLK hoists. Specify total length of two required pull chains.
Part No. D02-1413 (03170685) Pull chain for use on HL1000KR spark resistant hoists. Specify total length of two required pull chains.

Valve Chest Conversion Kit: Includes all components necessary to convert valve chests used on hoists with second letter of the serial number A through G or with second and third letters of the serial number HA, HB or HC to the same style valve chest used on hoists with second letter of the serial number other than A through G or with second and third letters of the serial number other than HA, HB or HC.
Part No. MLK-K545B (03835519).

Manual Brake Release Kit: Includes all the components for a manual release brake and/or 200% brake capability.
Part No. MLK-K390 (03721685) for use on all HLK Hoists.

Piped Away Exhaust Kit: Part No. MHLK-KEXH. Refer to Dwg. MHP0914.

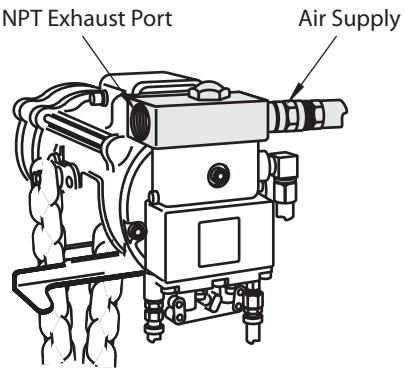

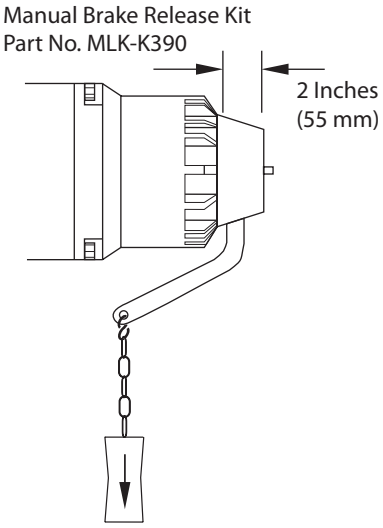

Quick-Exhaust Valves: Must be used on all Hoists with Pendant Control when hoses exceed 20 ft (6 m) in length and includes all fittings and clamps. One quick exhaust valve required for each control hose when length exceeds 20 ft (6 m). Two quick exhaust valves required for each control hose when length exceeds 50 ft (15 m).

Part No. 20417 (71069579) for all HLK Hoists.
Part No. MR-939 (03195484) for all trolley or crane motor control hoses.

Overhaul Gasket Kit: Includes gaskets, O-rings and seals for HLK Hoists.
Part No. HLK-K445 (03713740).

Valve Chest Kit:
Part No. MLK-VCK1 Kit. Refer to Dwg. TPA958-1.

Brake Kit:
Part No. MLK-ABK1 Kit. Refer to Dwg. TPB704-3.

ACCESSORIES

PENDANTS AND AIR HOSES

Description of Part	Part No.	Notes
Two Motor Pendant	HRA-A122C (03709177)	Order hose separately.
Three Motor Pendant	HRA-A132C (03709219)	
Two Motor Pendant and Hose Assembly	MLK-AL122C (04307336)	Specify hose length in feet.
Three Motor Pendant and Hose Assembly	MLK-AL132C (04307344)	
Precoiled Air Hose 1/2 in x 25 ft (13 mm x 8 m)	N12-25B	Hose sizes refer to inside diameter (ID).
Precoiled Air Hose 3/4 in x 25 ft (19 mm x 8 m)	N34-25B	
Precoiled Air Hose 3/4 in x 50 ft (19 mm x 15 m)	N34-50B	

Description of Accessory	Part No.
Chain Lubricant	LUBRI-LINK-GREEN

PARTS ORDERING INFORMATION

HLK Hoists are designed and constructed to provide long, trouble-free service. In time it may become necessary to order and install new parts to replace those that have been subjected to wear.

The use of other than **Ingersoll Rand** Material Handling replacement parts may result in decreased hoist performance, and may, at the company's option invalidate the warranty. For prompt service and genuine **Ingersoll Rand** Material Handling parts, provide your nearest distributor with the following:

1. Complete hoist model number and serial number as it appears on the nameplate.
2. Part number and part description as shown in this manual.
3. Quantity required.

The serial number label is located on the hoist housing.

The model number label is located on the hoist housing.

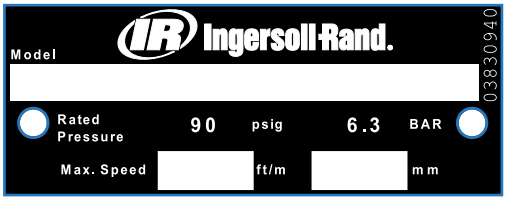

For your convenience and future reference it is recommended that the following information be recorded.

Hoist Model Number _____

Hoist Serial Number _____

Date Purchased _____

Return Goods Policy

If it becomes necessary to return the complete hoist or certain parts to the factory, contact the distributor from whom you purchased the hoist, or the nearest **Ingersoll Rand** distributor in your locality.

Ingersoll Rand will not accept any returned goods for warranty or service work unless prior arrangements have been made and written authorization has been provided from the location where the goods were purchased.

NOTICE

- **Continuing improvement and advancement of design may cause changes to this hoist which are not included in this manual. Manuals are periodically revised to incorporate changes. Always check the manual edition number on the front cover for the latest issue.**

DIsposal

When the life of the hoist has expired, it is recommended that the hoist be disassembled, degreased and parts separated as to materials so that they may be recycled.

NOTICE

- **Mineral based oils can be recycled, however, some oils such as glycols may be extremely toxic and must be identified and disposed of in accordance with local, state and national regulations.**

For additional information contact Ingersoll Rand Factory or the Nearest distributor:

Ingersoll Rand
20017 72nd Avenue South
Kent, WA 98032 USA
Phone: (877) 584-0370
Fax: (206)-624-6265

For additional information on the following products order the Publication by the referenced Part/Document Number listed:

Publication	Part/Document No.
TIR Trolley	MHD56083
PT/RT Trolley	MHD56102
TP3A-K430 and TP3A-K430T	P6719
CE120-K426 and CE120-K426T	P6720
TP3A-K426 and TP3A-K426T	P6723
CE120-K430 and CE120-K430T	P6725
TP6A-K430 and TP6A-K430T	P6743
TP6A-K426 and TP6A-K426T	P6744
MLK Hoist	P6554
HRA40A-A700 and HRA40A-AT700	Contact factory

LIMITED WARRANTY

Ingersoll Rand Company ("IR") warrants to the original user its industrial lifting equipment ("Hoist") to be free of defects in material and workmanship for a period of one year from the date of purchase. IR will, at its option either (1) repair, without cost, any Hoist found to be defective, including parts and labor charges, or (2) replace such Hoist or refund the purchase price, less a reasonable allowance for depreciation, in exchange for the Hoist. Repairs or replacements are warranted for the remainder of the original warranty.

If any Hoist proves defective within its original one-year warranty period, it should be returned to any Authorized Hoist Service Distributor, transportation prepaid with proof of purchase or warranty card. This warranty does not apply to Hoists which **IR** has determined to have been misused or abused, improperly maintained by the user, or where the malfunction or defect can be attributed to the use of non-genuine **IR** repair parts.

IR MAKES NO OTHER WARRANTY, CONDITION OR REPRESENTATION OF ANY KIND WHATSOEVER, EXPRESSED OR IMPLIED, STATUTORY OR OTHERWISE, AND ALL IMPLIED WARRANTIES AND CONDITIONS RELATING TO MERCHANTABILITY AND FITNESS FOR A PARTICULAR PURPOSE, ARE HEREBY DISCLAIMED.

IR's maximum liability is limited to the purchase price of the Hoist and in no event shall IR be liable for any consequential, indirect incidental or special damages of any nature arising from the sale or use of the Hoist, whether in contract, tort or otherwise.

Note: Some states do not allow limitations on incidental or consequential damages, so that the above limitations may not apply to you. This warranty gives you specific legal rights and you may also have other rights which may vary from state to state.

IMPORTANT NOTICE

It is our policy to promote safe delivery of all orders.

This shipment has been thoroughly checked, packed and inspected before leaving our plant and receipt for it in good condition has been received from the carrier. Any loss or damage which occurs to this shipment while en route is not due to any action or conduct of the manufacturer.

Visible Loss or Damage
If any of the goods called for on the bill of lading or express receipt are damaged or the quantity is short, do not accept them until the freight or express agent makes an appropriate notation on your freight bill or express receipt.

Concealed Loss or Damage
When a shipment has been delivered to you in apparent good condition, but upon opening the crate or container, loss or damage has taken place while in transit, notify the carrier's agent immediately.

Damage Claims
You must file claims for damage with the carrier. It is the transportation company's responsibility to reimburse you for repair or replacement of goods damaged in shipment. Claims for loss or damage in shipment must not be deducted from the **Ingersoll Rand** invoice, nor should payment of **Ingersoll Rand** invoice be withheld awaiting adjustment of such claims as the carrier guarantees safe delivery.

You may return products damaged in shipment to us for repair, which services will be for your account and form your basis for claim against the carrier.

www.ingersollrandproducts.com

© 2010 **Ingersoll Rand**