Plain, Hand Chain and Air Powered Trolley

Models TIR6600, TIR132 and RT010

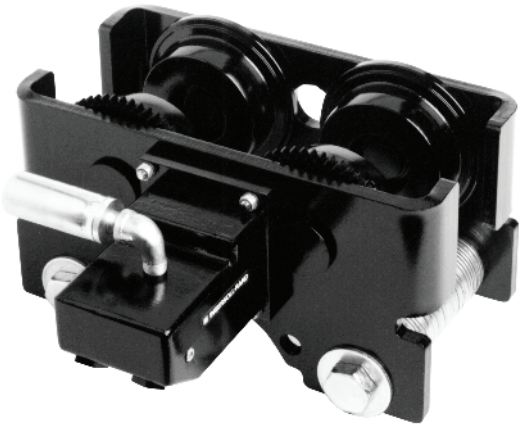

Operation and Maintenance Manual

Save These Instructions

Form MHD56083
Edition 4
April 2017
CCN 71146104

Ingersoll Rand®

Table of Contents

Safety Information 4
- Safety Summary 4
- Safe Operating Instructions 4
- Safety Symbol Identification 5
- Safety Information - Explanation of Safety Signal Words. 5

Specifications 6

Installation 8
- Trolley Installation Over the Open End of the Beam 8
- Trolley Installation from Underneath the Beam 8
- Hoist Installation 9
  - Hook Mount 9
  - Rigid Mount 9
- Power Unit Installation. 9
- Air System Requirements 10
  - Air Supply. 10
  - Air Lines 10
  - Air Line Lubricator (optional feature) 10
  - Air Line Filter 10
  - Moisture in Air Lines 10
- Power Unit (Air Motor). 10
- Storing The Trolley 10

Operation 11
- General Operating Information 11
  - Plain Trolley 11
  - Geared Trolley. 11
  - Powered Trolley 11
- Pendant Operation 11
- Initial Operating Checks. 12

Inspection 13
- Records and Reports. 13
- Frequent Inspection 13
- Periodic Inspection 13
- Trolleys not in Regular Use. 13

Lubrication 15
- Trolley Wheel Shafts. 15
- Trolley Wheel Bearings 15
- Geared Trolley Wheels and Pinion Shaft. 15
- Power Unit (Air Motor). 15
- Hand Chain 15

Maintenance 16
- Maintenance Intervals 16
- General Assembly/Disassembly Instructions. 16
- Hand Chain Adjustment or Replacement 16
- Disassembly Instructions. 18
  - Trolley Disassembly 18

Power Unit Disassembly . . . 18
Geared Trolley Chain Wheel Disassembly . . . 19
Cleaning, Inspection and Repair . . . 19
Assembly Instructions . . . 19
Power Unit Assembly . . . 19
Trolley Assembly . . . 20
Geared Trolley Chain Wheel Assembly . . . 20
Testing . . . 21
Trolley Operational Test . . . 21
Load Test . . . 21
Troubleshooting . . . 22
TIR6600 Trolley Assembly . . . 23
RT010 Rigid Trolley Assembly . . . 24
TIR132 Trolley Assembly . . . 25
TR-KG Hand Chain Gear Drive Assembly . . . 26
Plain and Geared Trolley Assembly . . . 27
Power Unit Assembly . . . 29
Pendant Hose Assembly . . . 32
Trolley and Hoist Pendant Control . . . 34
TIR6600 and TIR132 Hoist Suspension Adapters and Brackets . . . 36
RT010 Hoist Suspension Adaptors and Brackets . . . 37
Accessories . . . 37
Related Documentation . . . 38
Parts and Maintenance . . . 39

Safety Information

This manual provides important information for all personnel involved with the safe installation, operation and proper maintenance of this product. Even if you feel you are familiar with this or similar equipment, you should read this manual before operating the product.

NOTICE

This Trolley manual must be accompanied by the appropriate hoist manual(s) to provide complete hoist and trolley information.

⚠ WARNING

- **Do not use this trolley or attached equipment for lifting, supporting, or transporting people or lifting or supporting loads over people.**
- **Always operate, inspect and maintain this trolley in accordance with American Society of Mechanical Engineers safety code (ASME B30.7) and any other applicable safety codes and regulations.**
- **The supporting structures and load-attaching devices used in conjunction with this trolley must provide an adequate safety factor to handle the rated load, plus the weight of the trolley and attached equipment. This is the customer's responsibility. If in doubt, consult a registered structural engineer.**

Safety Summary

The National Safety Council, Accident Prevention Manual for Industrial Operations, Eighth Edition and other recognized safety sources make a common point: Employees who work near suspended loads or assist in hooking on or arranging a load should be instructed to keep out from under the load. From a safety standpoint, one factor is paramount: conduct all lifting or pulling operations in such a manner that if there were an equipment failure, no personnel would be injured. This means keep out from under a raised load and keep out of the line of force of any load.

The Occupational Safety and Health Act of 1970 generally places the burden of compliance with the owner/employer, not the manufacturer. Many OSHA requirements are not concerned or connected with the manufactured product but are, rather, associated with the final installation. It is the owner's and user's responsibility to determine the suitability of a product for any particular use. It is recommended that all applicable industry, trade association, federal, state and local regulations be checked. Read all operating instructions and warnings before operation.

Rigging: It is the responsibility of the operator to exercise caution, use common sense and be familiar with proper rigging techniques. Refer to ASME B30.9 for rigging information, American Society of Mechanical Engineers, Three Park Ave, New York, NY 10016.

This manual is produced by **Ingersoll Rand** to provide dealers, mechanics, operators and company personnel with the information required to install, operate, maintain and repair the products described herein.

It is extremely important that mechanics and operators be familiar with the servicing procedures of these products, or like or similar products, and are physically capable of conducting the procedures.

These personnel shall have a general working knowledge that includes:

1. Proper and safe use and application of mechanics common hand tools as well as special **Ingersoll Rand** or recommended tools.
2. Safety procedures, precautions and work habits established by accepted industry standards.

Ingersoll Rand can not know of, or provide all the procedures by which product operations or repairs may be conducted and the hazards and/or results of each method. If operation or maintenance procedures not specifically recommended by the manufacturer are conducted, it must be ensured that product safety is not endangered by the actions taken. If unsure of an operation or maintenance procedure or step, personnel should place the product in a safe condition and contact supervisors and/or the factory for technical assistance.

Safe Operating Instructions

The following warnings and operating instructions have been adapted in part from American National (Safety) Standard ASME B30.16 (Overhead Hoists) and are intended to avoid unsafe operating practices which might lead to injury or property damage.

Ingersoll Rand recognizes that most companies who use hoists and trolleys have a safety program in force at their facility. In the event that some conflict exists between a rule set forth in this publication and a similar rule already set by an individual company, the more stringent of the two should take precedence.

Safe Operating Instructions are provided to make an operator aware of unsafe practices to avoid and are not necessarily limited to the following list. Refer to specific sections in the manual for additional safety information.

Refer to the hoist manual for additional precautions and instructions.

1. Only allow personnel trained in safety and operation of this product to operate and maintain this trolley.
2. Only operate a trolley if you are physically able to do so.
3. When a **"DO NOT OPERATE"** sign is placed on the trolley or controls, do not operate the trolley until the sign is removed by designated personnel.
4. Before each shift, the operator should inspect the trolley for wear or damage.
5. Never use a trolley that inspection indicates is worn or damaged.
6. Periodically, inspect the trolley thoroughly and replace worn or damaged parts.
7. Lubricate the trolley regularly.

8. When using an attached hoist, only lift loads less than or equal to the lower rated capacity of the trolley or hoist.
9. Only attach a hoist having a rated capacity equal to or less than the capacity of the trolley.
10. When using two hoists to suspend one load, select two trolleys each having a rated capacity equal to or more than the load. This provides adequate safety in the event of a sudden load shift.
11. Never place your hand inside the throat area of a hook.
12. Only operate a trolley when the load is centered under the trolley. Do not “side pull” or “yard.”
13. Pay attention to the load at all times when operating the trolley.
14. Make sure all people are clear of the load path. Do not lift a load over people.
15. Never use the trolley for lifting or lowering people, and never allow anyone to stand on a suspended load.
16. Do not swing a suspended load.
17. Never suspend a load for an extended period of time.
18. Never leave a load suspended when the trolley is not in use.
19. Never weld or cut a load suspended by the trolley.
20. Always rig the load properly and carefully.
21. Remove all loads and shut off air supply before performing any maintenance.
22. Avoid collision or bumping of trolley.
23. After use, or when in a non-operational mode, the trolley should be secured against unauthorized and unwarranted use.
24. Trolleys are not approved for operation in explosive atmospheres.
25. Trolleys are not electrically insulated.

Safety Symbol Identification

Wear Eye Protection

Wear Hearing Protection

Read Manuals Before Operating Product

MHP2598

Safety Information - Explanation of Safety Signal Words

Throughout this manual there are steps and procedures which, if not followed, may result in a hazard. The following signal words are used to identify the level of potential hazard.

DANGER	Danger is used to indicate the presence of a hazard which will cause severe injury or death if the warning is ignored.
WARNING	Warning is used to indicate the presence of a hazard which can cause severe injury or death if the warning is ignored.
CAUTION	Caution is used to indicate the presence of a hazard which will or can cause minor injury or property damage if the warning is ignored.
NOTICE	Notice is used to notify people of installation, operation, or maintenance information which is important but not hazard-related.

Specifications

Model Code Explanation

Example: TIR6600S-G20AP — **TIR6600 S - G 20 A P**

Model:

TIR6600 6,600 lbs (3,000 kg) maximum capacity

TIR132 13,200 lbs (6,000 kg) maximum capacity

RT010 2,200 lbs (1,000 kg) maximum capacity

S•COR•E:

S = Cast Iron Wheels (Standard)

B = Solid Bronze Wheels S•COR•E

Type and Drive Options:

P = Plain Trolley

G = Hand Chain Gear Driven

0 = Vane Air Motor Driven (No pendant)

2 = Vane Air Motor Driven (Single motor pendant)

3 = Vane Air Motor Driven (Two motor pendant)

4 = Vane Air Motor Driven (Three motor pendant)

Chain/Pendant Length:

XX= Specify length (ft). [Max. 60 ft. (18 m)]

09= 9 ft (Std for pendent)

10= 10 ft (Std for hand chain)

00= No pendent or hand chain or a plain trolley

Beam Flange Width:

A = 2.66 to 6.00 inches (67 to 152 mm) Fits RT010

3.25 to 6.00 inches (82 to 152 mm) Fits TIR6600

4.25 to 7.25 inches (108 to 184 mm) Fits TIR132

D = 6.01 to 12.00 inches (153 to 305 mm) Fits TIR6600

Options:

A = ARO 7790 plain no adapter

E = ARO 1/4 to 1t adapter (TIR6600 only)

H = Hook on adapter (TIR6600 and TIR132 only)

J = HLK 1 and 1-1/2t lug adapter

K = HLK 2 and 3t lug adapter

M = MLK Hoist adapter rigid lug adapter (TIR6600 only)

P = Plain (no adapter)

R = ARO 7700 series adapter (RT010 only)

S = Palair Plus Hoist adapter (TIR6600 only)

T = Palair to RT rigid lug adapter

Figure 1. Performance Graph

Graph readings provide approximate trolley performance

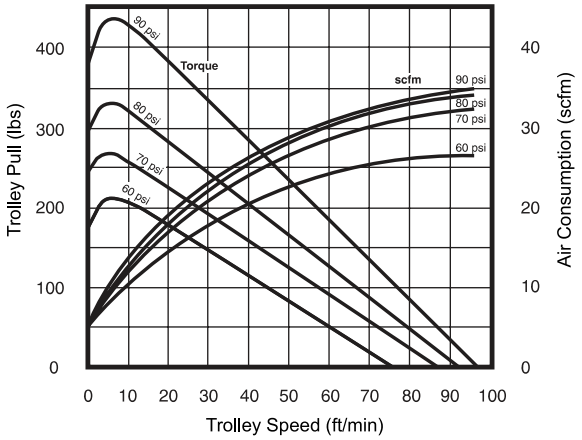

MHP0615

Figure 2. Performance based on 90 psig at the motor inlet

Performance based on 90 psig at the motor inlet

Suspended Load (metric tons) Beam Conditions		Maximum Trolley Speed	
Flat Dry Good	Curved Slick Poor	ft/min	m/min
6	3	44	13.4
4	2	63	19.2
3	1.5	71	21.6
2	1.0	80	24.4
1.50	0.75	84	25.6
1	0.50	88	26.8
0.50	0.25	93	28.3
0.25	0.13	95	28.9

Table 1. Performance Specifications

		Model					
		TIR 6600		TIR 132		RT010	
Maximum Load Capacity		6,600 lbs	3,000 kg	13,200 lbs	6,000 kg	2,200 lbs	1,000 kg
Beam Size	**Minimum Width**	3-1/4 in	83 mm	4-1/4 in	108 mm	2.66 in	67.6 mm
	Maximum Width	12 in	305 mm	7-1/4 in	184 mm	6.00 in	152 mm
	Minimum Height	6 in	152 mm	8 in	203 mm	4.00 in	102 mm
Minimum Turning Radius		42 in	1.1 m	72 in	1.83 m	38 in	965 mm
Working Pressure[a]		70 - 90 psig	5 - 6.3 bar 500 - 630 kPa	70 - 90 psig	5 - 6.3 bar 500 - 630 kPa	70 - 90 psig	5 - 6.3 bar 500 - 630 kPa
Trolley Travel Speed [b]	**Rated Load**	71 ft/min	21 m/min	60 ft/min (4-1/2 ton) 45 ft/min (6 ton)	18.3 m/min (4-1/2 ton) 13.7 m/min (6 ton)	70 ft/min	21.3 m/min
	No Load	95 ft/min	29 m/min	100 ft/min	30.5 m/min	80 ft/min	24.4 m/min
Maximum air Consumption at 90 psi		35 scfm	1 cu. m/min	35 scfm	1 cu. m/min	35 scfm	1 cu. m/min
Average Sound Level at a Distance of 4 Metres		90 dBa					
Trolley Weight (Plain Rigid)		34 lbs	15.5 kg	175 lbs	80 kg	28 lbs	12.7 kg
Trolley Weight (Plain Geared)		37 lbs	16.8 kg	178 lbs	81 kg	35 lbs	15.9 kg

The following air supply specifications should be maintained at the trolley air motor:

Air Pressure	90 psig	6.3 bar/630 kPa	90 psig	6.3 bar/630 kPa	90 psig	6.3 bar/630 kPa
Air Filtration	20 micron					
Inlet Hose Size (Inside Dia)	1/2 in	13 mm	1/2 in	13 mm	1/2 in	13 mm

[a] Recommended operating pressure: 90 psig (6.3 bar/630 kPa).
[b] Speed variable depending on amount of pendant lever movement.

Installation

Make certain your trolley is properly installed. A little extra time and effort in so doing can contribute toward preventing accidents and helping you get the best service possible.

⚠ WARNING

- **Before installing read Safety Information, p. 4.**
- **To avoid an unbalanced load which may damage the trolley, the hoist must be centered under the trolley.**
- **Make sure capacity of hoist does not exceed the rated capacity of the trolley assembly.**
- **To avoid an unbalanced load, center hanger shaft between trolley plates using properly installed spacer washers.**

NOTICE

- **Trolley wheels ride on the top of the lower flange of the beam.**
- **Install manual chain hoists so that hoist hand chain is on opposite side of trolley hand chain.**
- **Visually inspect components for distortion, wear and damage during installation. Replace any item indicating damage, distortion and/or excessive wear.**
- **During assembly lubricate gears, nuts, capscrews, and all machined threads with applicable lubricants. Use of antiseize compound and/or thread lubricant on capscrew and nut threaded areas prevents corrosion.**

Trolley Installation Over the Open End of the Beam

When installing a trolley on a beam, measure the beam flange and temporarily assemble the trolley on the hoist to determine the exact distribution and arrangement of the spacers. The distance between each wheel flange and the beam flange should be 3/32 to 5/32 in (2 to 4 mm). The number of spacers (105) between the trolley side plate (106) and the mounting bracket on the hoist must be the same in all four locations in order to keep the trolley and hoist centered under the beam.

The remaining spacers must be equally distributed on the outside of the side plates.

1. Measure beam flange width and establish required position for spacers (105). Install required outside spacers on suspender bolts (104).
2. Insert suspender bolts (104) through side plate (106).
3. Install an equal number of adjusting spacers (105) to each side of hoist adapter (213) or lug (138), on suspender bolts (104).
4. Install second side plate (106) on suspender bolts (104).
5. Install remaining adjusting spacers (105) equally to the outside of side plate (106) on suspender bolts.
6. Loosely install nuts (107) on suspender bolts (104). Do not tighten nuts to final torque.
7. Remove beam stop and slide assembled trolley onto beam.
8. Torque nuts (107) to 25 - 30 ft lbs (34 - 40 Nm).
9. Verify trolley flange to beam total clearance.
10. Upon completion of installation, install trolley beam stops and conduct initial operating checks as described in "Operation," p. 11. Check that side plates are vertical and parallel to each other.

Trolley Installation from Underneath the Beam

1. Pre-adjust trolley for installation using Figure 3, p. 9 and the following instructions.
2. Install outside spacers on suspender bolts (104) and insert suspender bolts through side plate (106).
3. Install an equal number of adjusting spacers (105) to each side of hoist adapter (213) or lug (138), on suspender bolts (104).
4. Support the assembled portion of trolley on the beam track.
5. Install second side plate (106).
6. To the outside of the side plate (106) place the remaining adjusting spacers (105) in equal numbers and nuts (107) on the suspender bolts (104).
7. Torque nuts (107) to 25 - 30 ft lbs (34 - 40 Nm).

NOTICE

The total clearance between the beam and the trolley wheel flanges is 3/16 to 5/16 inches (4 to 6 mm) when trolley is installed correctly. As shown in 3Trolley Installation from Underneath the Beam (MHP0651), p. 9, the difference between dimensions "X" and "Y" equals the total clearance.

Figure 3. Trolley Installation from Underneath the Beam (MHP0651)

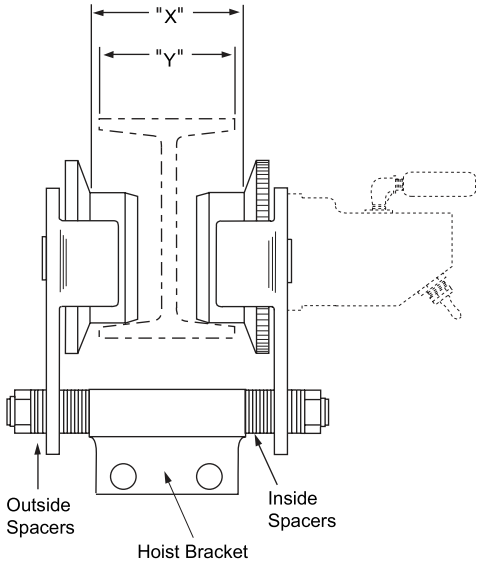

MHP0651

8. Verify trolley flange to beam total clearance.
9. Upon completion of installation, make sure trolley beam stops are installed and conduct initial operating checks as described in "Operation," p. 11. Check that side plates are vertical and parallel to each other.

Hoist Installation

Hook Mount

When the hoist is suspended by a top hook, the supporting member should rest completely within the saddle of the hook and be centered directly above the hook shank. Do not use a supporting member that tilts the hoist to one side or the other.

1. Place the hoist top hook in the hoist suspension adapter (213) or lug (138). Make sure hook latch is engaged.

Rigid Mount

1. Remove nuts (107) from suspension bolts (104). Record spacer position for later reassembly.
2. Pull side plate assembly from suspension bolts (104).
3. Remove hoist adapter, if supplied, from suspension bolts.
4. Install hoist adapter on hoist.
5. Install hoist adapter and hoist assembly on suspension bolts.
6. Install side plate assembly on suspension bolts.
7. Install spacers (105) and nuts (107) on suspension bolts. Verify spacers are positioned to provide correct trolley to beam clearance.
8. On **ML500KR, ML1000K, ML1000KS, HL2000K** and **HL3000K** hoists attach load chain end to chain anchor with pins. Bend the ends of pin apart to secure. Refer to hoist manual for additional information.

Power Unit Installation

NOTICE

To prevent damage to the power unit, install trolley to beam and hoist to trolley before installing power unit to trolley.

1. Prior to installing trolley to beam, make sure studs (115) are installed and tight in the side plate on which the power unit will be mounted. If studs are not installed or are loose, remove wheels and press four studs (115) into the sideplate until heads are seated on the inside of the sideplate.
2. Reassemble wheel assemblies to sideplate and install trolley to beam.
3. Align trolley assembly geared wheels (114) and pinion gear (214). Liberally coat pinion gear (214) and geared wheel (114) teeth with grease (EP #1).
4. Secure power unit to trolley by installing lockwashers (116) and nuts (117) on studs (115).
5. Connect pendant air hoses to hose adapters (259).

⚠ CAUTION

- **To avoid damaging the pendant hose, make sure the strain relief cable, not the pendant hose, is supporting the weight of the pendant.**
- **Check all hose connections are tight and that hoses are not twisted or crimped.**

Air System Requirements

Air Supply

The air supply must be clean and free from moisture. The air consumption for the powered trolley is 35 scfm (1 cu.m/min) at rated operating pressure of 90 psig (6.3 bar/630 kPa) at the trolley motor.

Air Lines

The inside diameter of the trolley air supply hoses must not be smaller than 1/2 in (13 mm) and 7/16 in (11 mm) for hose fittings. Before making final connections, all air supply lines should be purged with moisture-free air before connecting to trolley power unit inlet. Supply lines should be as short and straight as installation conditions will permit. Long transmission lines and excessive use of fittings, elbows, tees, globe valves (etc.) cause a reduction in pressure due to restrictions and surface friction in the lines.

Air Line Lubricator (optional feature)

Use a lubricator having an inlet and outlet size at least as large as the inlet size to the power unit. Install the lubricator as close to the air inlet on the trolley power unit as possible. The air line lubricator should be replenished daily and set to provide 2 to 3 drops per minute of SAE 10W oil. The use of an air line lubricator is optional for Palair Plus or Palair Premium hoists. The trolley power unit may be run without in line lubrication, however, accelerated vane and cylinder wear may be experienced.

Air Line Filter

If trolley is to be used in corrosive or moist atmospheres it is recommended that an air line strainer/filter be installed as close as practical to the motor. The strainer/filter should provide 20 micron filtration and include a moisture trap. Clean strainer/filter periodically to maintain its operating efficiency.

Moisture in Air Lines

Moisture that reaches the trolley power unit through the supply lines is the chief factor in determining the length of time between service overhauls. Moisture traps can help to eliminate moisture. Other methods, such as an air receiver which collects moisture before it reaches the trolley power unit, or an aftercooler at the compressor that cools the air prior to distribution through the supply lines, are also helpful.

Power Unit (Air Motor)

For optimum performance and maximum durability of parts, operate the trolley power unit within the operating ranges provided. Refer to "Specifications," p. 6.

Storing The Trolley

1. Always store the trolley in a no load condition.
2. Wipe off all dirt and water.
3. Oil the hand chain.
4. Place in a dry location.
5. Before returning trolley to service follow instructions for Trolleys Not In Regular Service. Refer to "Inspection," p. 13 .

Operation

The **four most important** aspects of trolley operation are:

1. Follow all safety instructions when operating trolley.
2. Allow only personnel trained in safety and the operation of this product to operate and maintain this equipment.
3. Subject each trolley to a regular inspection and maintenance procedure.
4. Be aware of the hoist and trolley capacity and weight of load at all times.

General Operating Information

Operate the trolley from a position that allows you to observe the load and the intended path of movement of the load.

Do not walk in the path of a moving trolley, or walk backwards when moving a trolley.

Always look in the direction you are moving.

Plain Trolley

1. To move an unloaded hoist/trolley, push on the hoist load chain.
2. To move a loaded hoist/trolley, push on the load or the hoist load hook shank.

Geared Trolley

Refer to Figure 4, p. 11.

1. When facing the trolley hand wheel:
   a. Pull down on right side of hand chain (Clockwise rotation) to move left.
   b. Pull down on left side of hand chain (Counterclockwise rotation) to move right.

Figure 4. Geared Trolley (MHP0100)

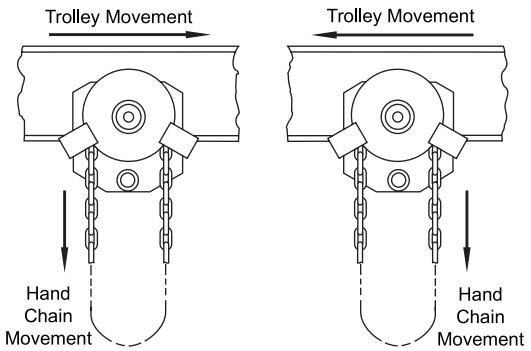

MHP0100

Powered Trolley

Direction of trolley travel and speed is controlled by the pendant throttle. Make sure direction arrows on pendant throttle match trolley movement.

Pendant Operation

Refer to Parts List Form number P6778 for additional information on Pendant Assemblies. Figure 5, p. 12, shows a twofunction pendant.

Figure 5. Pendant Operation (MHP1008)

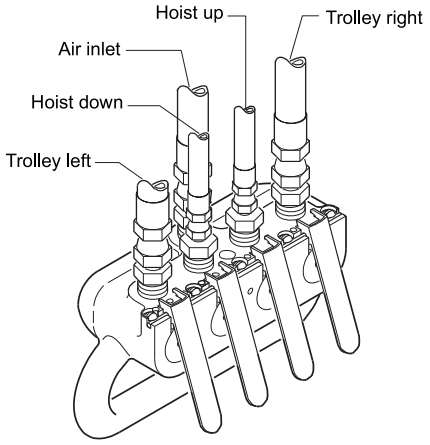

MHP1008

Initial Operating Checks

1. After installation, make sure the hoist is centered below the trolley.
2. On powered trolleys, check for air leaks in supply hose and fittings to pendant and drive unit.
3. Raise a load equal to the lower of the rated capacities of either the trolley or hoist 3 to 4 inches (75 to 100 mm) off the floor.
4. Operate the trolley along the entire length of the beam.
5. Inspect trolley performance when moving test load(s). Trolley must operate smoothly and at rated specifications prior to being placed in service for general use.
6. Check that trolley movement complies with the pendant arrows, on air powered trolley units.

Inspection

⚠ WARNING

All new, altered or modified equipment should be inspected and tested by personnel trained in safety, operation and maintenance of this equipment to make sure safe operation at rated specifications before placing equipment in service.

Frequent and periodic inspections should be performed on equipment in regular service. Frequent inspections are visual examinations performed by operators or personnel trained in safety and operation of this equipment and include observations made during routine equipment operation. Periodic inspections are thorough inspections conducted by personnel trained in the safety, operation and maintenance of this equipment. ASME B30.16 states inspection intervals depend upon the nature of the critical components of the equipment and the severity of usage.

Careful inspection on a regular basis will reveal potentially dangerous conditions while still in the early stages, allowing corrective action to be taken before the condition results in a hazard.

Deficiencies revealed through inspection, or noted during operation, must be reported to designated personnel trained in safety, operation and maintenance of this equipment. A determination as to whether a condition constitutes a safety hazard must be decided, and the correction of noted safety hazards accomplished and documented by written report before placing the equipment in service.

Records and Reports

Inspection records, listing all points requiring periodic inspection should be maintained for all load bearing equipment. Written reports, based on severity of service, should be made on the condition of critical parts as a method of documenting periodic inspections. These reports should be dated, signed by the person who performed the inspection, and kept on file where they are readily available for review.

NOTICE

During assembly/disassembly visually inspect each component for distortion, wear and damage. Replace items indicating damage, distortion and/or excessive wear. Proper use, inspections and maintenance will increase the life and usefulness of your Ingersoll Rand equipment.

Frequent Inspection

On trolleys in continuous service, frequent inspection should be made at the beginning of each shift. In addition, visual inspections should be conducted during regular service for any damage or evidence of malfunction.

1. OPERATION. Operate the trolley so that it travels a few feet (1 metre). During the few feet (1 metre) of travel, check for visual signs or abnormal noises which could indicate wear or damage. Check for smooth operation. Do not operate the trolley until all problems have been corrected.
2. AIR SYSTEM. (Powered Trolleys only) Visually inspect all connections, fittings, hoses and components for indication of air leaks. Repair any leaks found.
3. CONTROLS. (Powered Trolleys only) During operation of trolley, verify trolley response to pendant use is quick and smooth. If trolley responds slowly or movement is unsatisfactory, do not operate the trolley until all problems have been corrected.

Periodic Inspection

According to ASME B30.16 (Overhead Hoists), frequency of periodic inspection depends on the severity of usage:

NORMAL	HEAVY	SEVERE
yearly	semiannually	quarterly

Disassembly may be required for HEAVY or SEVERE usage. Keep accumulative written records of periodic inspections to provide a basis for continuing evaluation.

Inspect all the items in “Frequent Inspection.” Also inspect the following:

1. FASTENERS. Check retainer rings, split pins, capscrews and nuts. Replace if missing or damaged and tighten if loose.
2. ALL COMPONENTS. Inspect for wear, damage, distortion, deformation and cleanliness. If external evidence indicates the need, disassemble. Check gears, shafts and bearings. Replace worn or damaged parts. Clean, lubricate and reassemble.
3. SUPPORTING STRUCTURE. Check for distortion, wear and continued ability to support load.
4. WHEELS. Check that the trolley wheels track the beam properly and clearance between each trolley wheel flange and beam equals 3/32 to 5/32 in. (2 to 4 mm). Adjust as necessary.
5. SIDEPLATES. Check side plates for spreading due to bending. Replace if spreading has occurred.
6. AIR MOTOR. (Powered Trolleys only) Check that loaded and unloaded operation of trolley is within specifications. Verify air connections do not leak, and hoses are in good condition. Verify that trolley air motor operates smoothly, and responds quickly to pendant commands.
7. HAND CHAIN and HAND CHAIN WHEEL. (Geared Trolley Only) Check for damage or excessive wear. Replace if necessary.
8. LABELS. Check for presence and legibility. Replace if necessary.

Trolleys not in Regular Use

1. A trolley which is idle for a period of one month or more, but less than six months, shall be given an inspection conforming with the requirements of “Frequent Inspection” before being placed into service.

2. A trolley which is idle for a period of over six months shall be given a complete inspection conforming with the requirements of “Periodic Inspection” before being placed into service.
3. Standby trolleys shall be inspected at least semiannually in accordance with the requirements of “Frequent Inspection”. If abnormal operating conditions apply trolleys may require more frequent inspections.

Lubrication

Proper use, inspections and maintenance increase the life and usefulness of your **Ingersoll Rand** equipment. During assembly lubricate gears, nuts, capscrews and all machined threads with applicable lubricants. Use of antiseize compound and/or thread lubricant on capscrew and nut threaded areas prevents corrosion and allows for ease of disassembly of component.

Trolley Wheel Shafts

During assembly lubricate trolley wheel shafts with an antiseize compound or thread lubricant as applicable to prevent corrosion.

Trolley Wheel Bearings

TIR6600 and RT010 Trolleys

Wheel bearings are sealed and permanently lubricated. They do not require additional lubrication.

TIR132 Trolleys

The trolley wheel bearings are adequately lubricated at the factory to provide long, trouble-free service. However, should the trolley wheels be disassembled for inspection or repair, repack the trolley wheel bearings. Use recommended grease in "Geared Trolley Wheels and Pinion Shaft" section. Grease fittings are provided in the end of each wheel shaft. Lubricate every 6 months with 2 or 3 pumps from a grease gun.

Geared Trolley Wheels and Pinion Shaft

Lubricate exposed trolley drive pinion and wheel teeth. Brush with grease as often as necessary to keep teeth liberally covered. Lubricate grease fittings in bracket (118) and chain guide (122) every 6 months with 2 or 3 pumps from a grease gun or more frequently, depending on severity of service. If the grease becomes contaminated with sand, dirt or other abrasive materials, clean off old grease and brush on new. For temperatures -20° to 50° F (-29° to 10° C) use EP 1 grease or equivalent. For temperatures 30° to 120° F (-1° to 49° C) use EP 2 grease or equivalent.

⚠ CAUTION

When greasing pinion and geared wheels make sure excess grease is cleaned off trolley wheel riding surface and track or beam. Failure to keep beam and wheel contact surfaces clean could affect the safe operation of the trolley.

Power Unit (Air Motor)

An in-line air lubricator is recommended and should be checked/replenished daily and set to provide 2 to 3 drops per minute at full throttle of good quality hydraulic oil. Refer to "Accessories," p. 37 for lubricator and air filter information.

⚠ CAUTION

Shut off air supply before filling air line lubricator.

Hand Chain

Hand chain, used on geared trolleys, normally requires no lubrication.

Maintenance

⚠ WARNING

- **Never perform maintenance on the trolley while it is supporting a load. A falling load can cause injury or death and damage to property.**
- **Before starting maintenance, tag controls:**

  WARNING- DO NOT OPERATE - EQUIPMENT BEING REPAIRED.
- **Only allow personnel trained in service and repair on this equipment to perform maintenance.**
- **After performing any maintenance on the trolley, test trolley to 125% of its rated capacity before returning to service. Testing to more than 125% of rated capacity may be required to comply with standards outside the USA.**
- **Disconnect air supply from trolley and hoist prior to conducting maintenance.**

Proper use, inspections and maintenance increase the life and usefulness of your Ingersoll-Rand equipment. During assembly lubricate gears, nuts, capscrews and all machined threads with applicable lubricants. Use of antiseize compound and/or thread lubricant on capscrew and nut threaded areas prevents corrosion and allows for ease of disassembly of component.

Maintenance Intervals

The Maintenance Interval chart is based on intermittent operation of the trolley eight hours each day, five days per week. If trolley is in operation more than eight hours per day, or in severe applications or environments, more frequent maintenance should be performed.

Interval	Maintenance Check
Start of each shift (Operator or Maintenance Personnel)	Make a thorough visual inspection of the trolley for damage. Do not operate the trolley if damaged.
	Operate the trolley slowly in both the directions. Trolley must operate smoothly without sticking, binding or abnormal noises.
Yearly (Maintenance)	Inspect the trolley motor, wheels, shafts and bearings for wear and damage. Repair or replace as necessary.
	Check all supporting members for indications of damage or wear. Repair or replace as required.

General Assembly/Disassembly Instructions

1. During assembly/disassembly steps for installation and/or repair visually inspect components for distortion, wear and damage. Replace any item indicating damage, distortion and/or excessive wear.
2. **Do not** disassemble further than required to accomplish repair. A good part can be damaged during the course of disassembly.
3. **Do not** use excessive force to remove or install parts. Use proper tools for the installation of press fit parts. During disassembly, use a soft hammer to tap around the outside of parts that are stuck together.
4. **Do not** use a flame to heat a part for ease in installation. During disassembly, only use a flame to heat a part that is damaged beyond repair; use a procedure that will not result in damage to other parts; and, use this option only after all other reasonable measures have been attempted.
5. **Always** use leather or copper-covered vise jaws to protect threaded and machined surfaces of parts being placed in the vise.
6. When installing bearings, **only** press on the bearing race contacting the component to be installed on or into. For shafts, press on the inner bearing race; for housings, press on the outer bearing race.
7. **Do not** damage seating surfaces during gasket and “O-Ring” removal. Use wood, plastic or brass removal tools to prevent scoring of machined sealing surfaces.
8. **Always** use only genuine **Ingersoll Rand** replacement parts. When ordering specify part number, part description, trolley model and serial number.
9. **Do not** perform repairs to trolleys in place. It is recommended that trolleys be removed and repaired in a clean, safe work area.
10. On powered trolleys, after any air system repair, purge the air system with moisture-free air before connecting to motor inlet. Make sure air lines are disconnected from the trolley power unit and hoist during purge.

Hand Chain Adjustment or Replacement

⚠ CAUTION

When cutting the weld side of a hand chain link, do not cut or nick the opposite side. A damaged link must be replaced to prevent premature failure. A falling hand chain can cause injury.

1. To create a “C” link, cut the weld side of the link with a hack saw. Clamp one side of the “C” link in a vise and bend it open by using pliers to grip the exposed part of the link. Refer to Figure 6, p. 17.
2. If you are replacing the hand chain, disconnect it at the “C” link and carefully remove the hand chain.

Figure 6. Hand Chain Adjustment or Replacement (MHP0016)

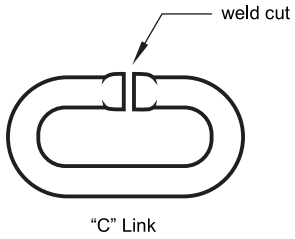

MHP0016

Figure 7. Hand Chain Adjustment or Replacement (MHP0014)

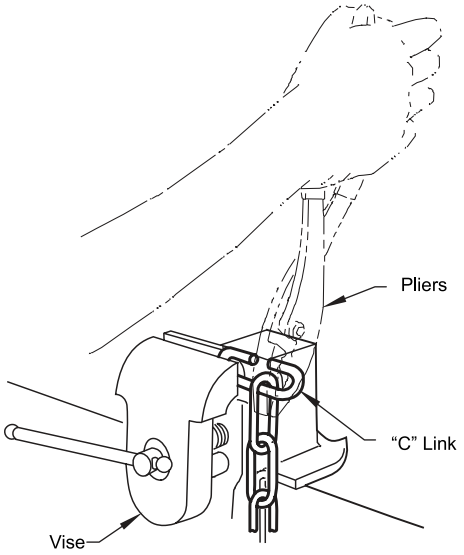

MHP0014

3. To replace chain:
   a. Cut a length of chain 2 times the required hand chain drop plus 1 foot (30 cm).
   b. Run the new chain up through the left hand chain guide, around the chain wheel, making sure the hand chain is seated in the chain wheel pockets, and back down through the right hand chain guide.
4. To adjust chain length:
   a. Add or remove a length of chain 2 times the desired amount of chain adjustment.

NOTICE

To prevent the hand chain from twisting maintain an even number of links.

5. Connect the hand chain ends with the “C” link(s), make the total number of links even, and bend the “C” link(s) shut.
6. Make sure the hand chain is not twisted. To untwist, open a “C” link and remove one hand chain link. Refer to Figure 8, p. 18.

Figure 8. Hand Chain Adjustment or Replacement (MHP0015)

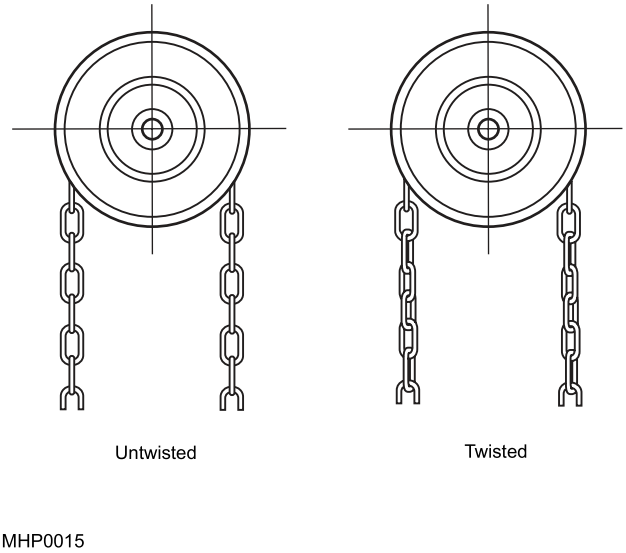

Disassembly Instructions

Trolley Disassembly

NOTICE

- **Prior to disassembly note the installation of the adjusting spacers (105). Install adjusting spacers (105), during assembly, in the same configuration recorded during disassembly to make sure beam flange width and hoist position are retained.**
- **Prior to disassembly of trolley, first remove trolley power unit and then remove hoist.**

Models TIR6600 and RT010

1. Remove nuts (107) and adjusting spacers (105) from the outside of side plates (106).
2. Remove side plate (106).
3. Remove adjusting spacers (105), suspender bolts (104) and hoist adapter (213) from remaining side plate.
4. To remove wheels, remove retainer ring (103) from wheel stud and slide wheel off.
   If wheel is difficult to remove, gently tap wheel shaft with plastic hammer to loosen.
5. To remove wheel bearings. Remove retainer rings (100) and tap out bearings.
6. Reassemble trolley as described in "Installation," p. 8.
7. Test trolley and hoist operation as described in the "Testing," p. 21 prior to returning to general use.

Model TIR132

8. Remove nuts (107) and adjusting spacers (105) from the outside of side plates (106).
9. Remove side plate (106).
10. Remove adjusting spacers (105), suspender bolts (104) and hoist lug (138) from remaining side plate.
11. Remove nuts (135) and lockwashers (136) from wheel shafts (132). Tap wheel shafts (132) from side plates (106).
12. Remove nuts (131) and capscrews (133) from trolley wheels.
13. Remove bearing plate (130) and bearing cap (134). Tap out bearing (101) and wheel shaft (132) from wheel.

Power Unit Disassembly

1. Disconnect air hoses from power unit.
2. Remove capscrews (117)
3. Remove power unit assembly from trolley side plate (106).
4. Remove capscrews (220) and lockwashers (221).
5. Remove plate (222). Remove keys (218) from spindle shaft (217).
6. Remove gears (226, 227, 229), washers (223) and thrust race (228) from motor housing (254).
   Spindle assembly (214 through 219) should not be removed from plate (222) unless repair is required.
7. To remove spindle assembly from plate:
   a. Remove retaining ring (219).
   b. Tap end of spindle shaft (217) to remove from plate (222).

8. To disassemble spindle assembly:
   a. Remove retaining ring (219), pinion gear (214), keys (218) and bearing (216) from spindle shaft (217).
9. To remove motor assembly (items 239 through 251):
   a. Remove capscrews (238) from brake cone (237).
   b. Grasping pinion shaft (231) pull assembly free of motor housing (254).
10. To disassemble motor assembly (items 239 through 251):
    a. Remove nut (230) and separate components (231 through 251) using Dwg. MHP0673 on page 22 as a guide.

Geared Trolley Chain Wheel Disassembly

This section details the disassembly of the geared trolley chain wheel.

1. Remove retainer ring (141) and loosen capscrew (117) in chain wheel (123).
2. Remove chain wheel (123) and key (125) from pinion shaft (113).
3. Remove chain guide (122) from pinion shaft.
4. Remove capscrews (117) which secure bracket (118) to side plate (106).
5. Remove bracket assembly.

NOTICE

Do not remove pinion shaft (113) unless necessary to repair, replace or inspect.

6. Remove retainer ring (110) and pinion gear (111).
7. To remove the pinion shaft gently tap shaft on pinion gear end with a plastic hammer to loosen. Slide pinion shaft (113) out of bracket (118).

Cleaning, Inspection and Repair

Use the following procedures to clean, inspect, and repair the components of the trolley.

Cleaning

⚠ CAUTION

- **Bearings that are loose, worn or rotate in the housing must be replaced. Failure to observe this precaution will result in additional component damage.**
- **Do not use trichloroethylene to clean parts.**

Clean all trolley components parts in solvent (except for the brake lining). The use of a stiff bristle brush will facilitate the removal of accumulated dirt and sediments on the gears and frames. Dry each part using low pressure, filtered compressed air.

Inspection

All disassembled parts should be inspected to determine their fitness for continued use. Pay particular attention to the following:

1. Inspect all gears for worn, cracked, or broken teeth.
2. Inspect shafts for ridges caused by wear. If ridges caused by wear are apparent on shafts, replace the shaft.
3. Inspect all threaded items and replace those having damaged threads.
4. Check mufflers for damage or excessive dirt.
5. Check bearings for freeness of rotation and wear. Replace bearings if rotation is rough or bearings are excessively worn.

Repair

Actual repairs are limited to the removal of small burrs and other minor surface imperfections from gears and shafts. Use a fine stone or emery cloth for this work.

1. Worn or damaged parts must be replaced. Refer to the applicable parts listing for specific replacement parts information.
2. Inspect all remaining parts for evidence of wear or damage. Replace or repair any part which is in questionable condition. The cost of the part is often minor in comparison with the cost of redoing the job.
3. Smooth out minor nicks, burrs, or galled spots on shafts, bores, pins, or bushings.
4. Examine all gear teeth carefully, and remove nicks or burrs.
5. Polish the edges of all shafts shoulders to remove small nicks which may have been caused during handling.
6. Remove all nicks and burrs caused by lockwashers.
7. Replace all seals, “O-Rings” and gaskets.

Assembly Instructions

Power Unit Assembly

1. Slide end plate (249) on rotor (244) shaft.

2. Install bearing (251) on rotor (244) shaft.

   Lubricate gears liberally with EP#1 grease. Coat rotor blades (245) and inside of cylinder (243) with ARO 29665 spindle oil.

NOTICE

- **During assembly make sure housing and components are clean.**
- **During installation of bearings (239 and 251) on rotor (244) shaft, press only on the inner race of bearing.**

3. Insert rotor blades (245) into blade slots of rotor (244). Insert with blade straight side facing out.
4. Slide cylinder (243) over rotor (244). Align air inlet slots of cylinder (243) and end plate (249). Tap on over spring pin (242).
5. Install spacer (241) and end plate (240) to rotor (244).
6. Install bearing (239) on shaft of rotor (244).
7. Install bearing (251) on rotor (244) and insert into end plate (249).

   Lubricate gears liberally with EP #1 grease.
8. Check motor assembly (items 239 thru 251) operation. Rotor should turn easily in cylinder without binding. If rotor binds, tap splined end lightly to loosen.
9. Install locating pin (250) in end plate (240) and install motor assembly in motor housing (254). Align the locating pin (250) with groove in housing (254).
10. Install brake cone (237) in motor housing (254) and secure with capscrews (238).
11. Install brake lining (236) to brake cone (237).
12. Install finger spring (235). Assemble with fingers facing out (toward pinion shaft (231) splines).
13. Install spacer (if required) (232), washer (233) and “O-Ring” (234) on pinion shaft (231).

NOTICE

A torque of 2 to 3 inch-lbs. (0.225 - 0.34 Nm) to rotate spindle in both directions is required for proper installation of brake components. The use of the 0.010 inch (0.25 mm) spacer (232) may or may not be necessary to achieve required torque.

14. Slide pinion shaft (231) over rotor (244) shaft and secure with nut (230).

    Lubricate needle bearings in plate (222) with EP #1 grease prior to installing gears. Lubricate gears liberally with EP #1 grease.
15. Install washers (223), thrust race (228) into motor housing (254).
16. If required, reassemble spindle components as follows:

    a. Install bearing (216), key (218), pinion gear (214) and retaining ring (219) on spindle shaft (217).

    Lubricate pinion gear with EP #1 grease.
17. Install spindle assembly in plate (222). Lock in place with retaining ring (215).
18. Install key (218) and retainer ring (219) on spindle shaft (217). Insert washers (223) and gears (226 and 229) into plate (222).
19. Slide gear (227) onto spindle shaft (217).

    Make sure key (218) is properly installed on spindle shaft (217) to hold gear (227).
20. Install plate (222) to motor housing (254) and secure with lockwashers (221) and capscrews (220).
21. Install power unit assembly to trolley side plate (106). Secure with capscrews (117) and lockwashers (116).
22. Test trolley and hoist operation as described in the “Testing,” p. 21 prior to returning to general use.

Trolley Assembly

TIR132 Trolley Assembly

1. Press bearing (101) onto wheel shaft (132) until bearing is snug against shoulder.
2. Install wheel shaft and bearing assembly in wheel (102 or 114).
3. Position a bearing cap (134) and bearing plate (130) on either side of the wheel. Align bolt holes and install four capscrews (133) and nuts (131).
4. Repeat steps 1 through 3 for each wheel.
5. Slide spacer (137) onto wheel assemblies and install into side plates (106). Secure with lockwashers (136) and nuts (135). Torque to 250 ft lbs (339 Nm)

Geared Trolley Chain Wheel Assembly

1. Install shaft (113) through bearing bores and tap into position.
2. Install key (112) and pinion (111) on shaft at the bracket mounting flange end. Secure gear in position with retainer ring (110).
3. Mount bracket subassembly to side plate (106) with capscrews (117) and lockwashers (116).
4. Install chain guide (122) on shaft. Install key (125) and tap chain wheel (123) into position. Secure chain wheel on shaft with retainer ring (141) and tighten capscrew (117).
5. Install hand chain.

Testing

Prior to initial use, all new, extensively repaired, or altered trolleys shall be tested by, or under the direction of a person trained in maintenance and repair of this trolley and a written report furnished confirming the rating of the tested equipment.

⚠ WARNING

Only attach a hoist having a rated capacity equal to or less than the capacity of the trolley.

Trolley Operational Test

To make sure proper operation of the trolley conduct the following:

1. On powered trolleys, verify that pendant to trolley hoses are properly attached and that trolley movement agrees with the pendant lever arrows.
2. Operate trolley without a load. Verify trolley operates smoothly along entire length of the beam.
3. Operate trolley with a load. Verify trolley operates smoothly along entire length of the beam.

Load Test

NOTICE

Conduct load test with hoist attached to trolley. Refer to Hoist manual for applicable maximum hoist load capacity in Specifications, p. 6.

With the hoist properly attached, conduct a load test to 125% of the **rated trolley capacity**.

Testing to more than 125% may be necessary to comply with standards and regulations set forth in areas outside of the USA.

Troubleshooting

This section provides basic troubleshooting information. Specific causes to problems are best identified by thorough inspections performed by personnel instructed in safety, operation and maintenance of this equipment. The chart below provides a brief guide to common trolley symptoms, probable causes and remedies.

Symptom	Cause	Remedy
Trolley will not operate.	Trolley is overloaded.	Reduce load to within rated capacity.
	Trolley wheel bearings are damaged.	Replace trolley wheel bearings.
	Pinion shaft damaged.	Replace pinion shaft.
	Geared wheel(s) damaged.	Replace geared wheel(s).
	Motor damaged.	Disassemble, inspect and repair or replace damaged or worn air motor parts.
	Low supply air pressure.	Check air supply line pressure. 90 psig at 35 scfm (6.3 bar/630 kPa at 1 cu. m/min) required for efficient operation.
	Loose hose connections.	Check all hose fitting connections. Repair all leaking connections and damaged hose sections.
	Pendant malfunction.	Troubleshoot and repair or replace damaged or worn pendant parts.
	Track or beam is contaminated.	Check beam for foreign matter or contamination.
Trolley will not stop or trolley wheels slip.	Oil or grease on trolley wheels or beam.	Clean beam track and trolley wheels.
	Damaged brake lining.	Disassemble air motor and replace brake lining.
	Pendant malfunction.	Inspect and repair or replace damaged or worn pendant parts.
Poor motor performance or loss of power.	Low supply air pressure.	Check air supply line pressure. 90 psig at 35 scfm (6.3 bar/630 kPa at 1 cu. m/min) at trolley power unit required for efficient operation.
	Loose hose connections.	Check all hose fitting connections. Repair all leaking connections and damaged hose sections.
	Worn or broken rotor blades.	Disassemble power unit and motor assembly. Repair or replace motor or rotor blades.
	Worn or broken motor rotor bearings.	Disassemble power unit and motor assembly. Replace bearings.
	Foreign contaminants building up in motor.	Disassemble power unit, clean parts carefully and reassemble. Install a 20 micron filter to protect the air motor.
Hand Chain operation difficult/ impossible.	Twisted chain.	Untwist chain. Make sure chain has even number of links.
	Chain Wheel damaged.	Replace Chain Wheel.
	Pinion Shaft damaged.	Replace Pinion Shaft.
	Geared Wheel(s) damaged.	Replace Geared Wheel(s).

TIR6600 Trolley Assembly

Figure 9. TIR6600 Trolley Assembly - Exploded View

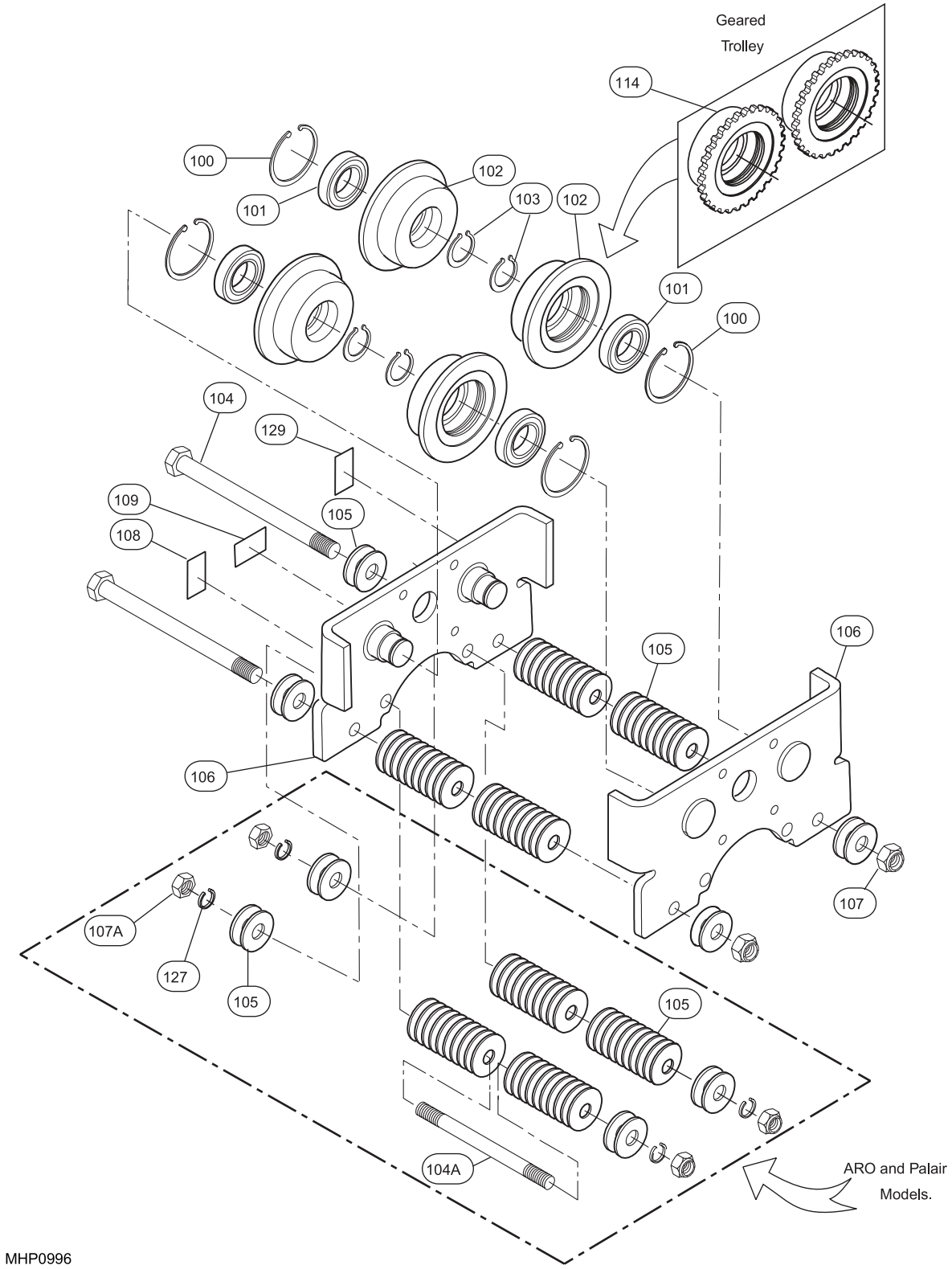

RT010 Rigid Trolley Assembly

Figure 10. RT010 Rigid Trolley Assembly - Exploded View

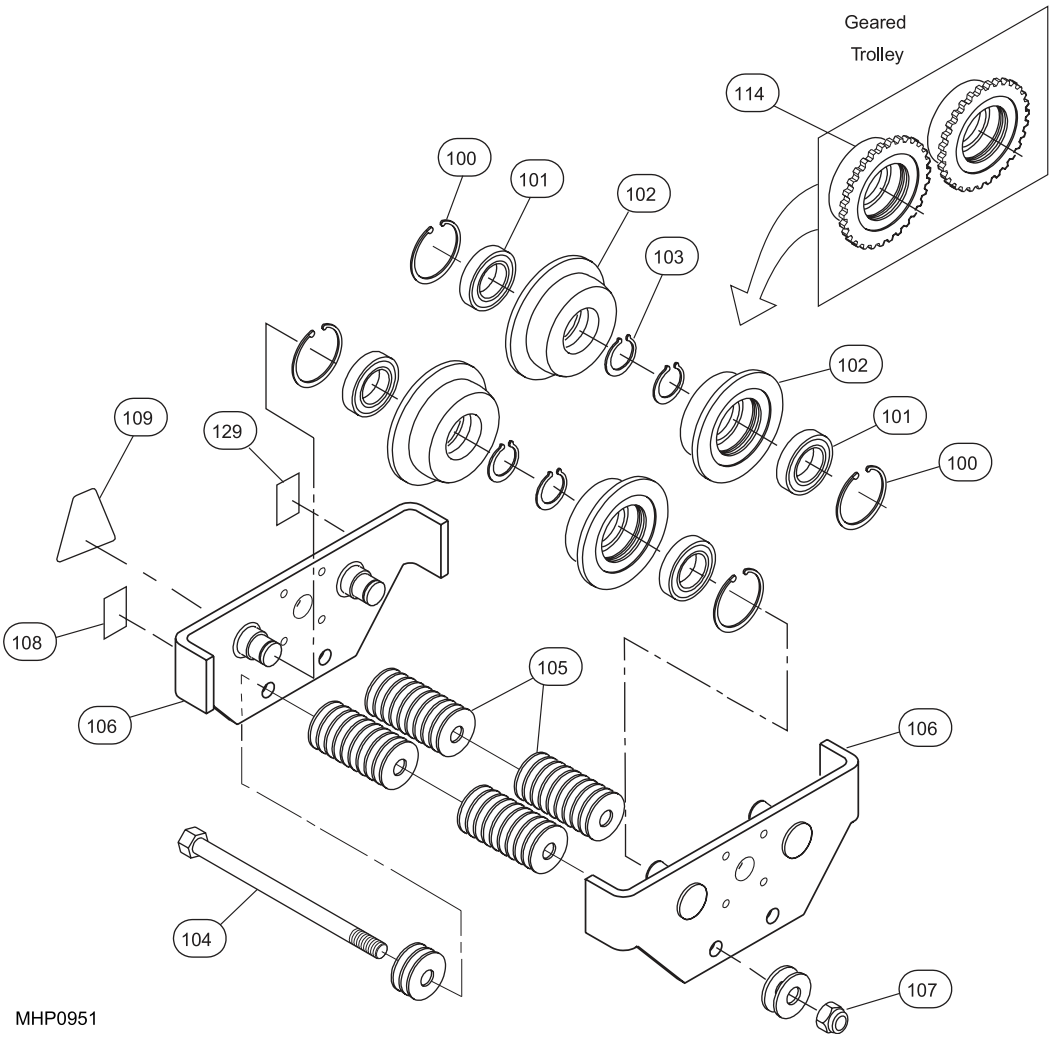

TIR132 Trolley Assembly

Figure 11. TIR132 Trolley Assembly - Exploded View

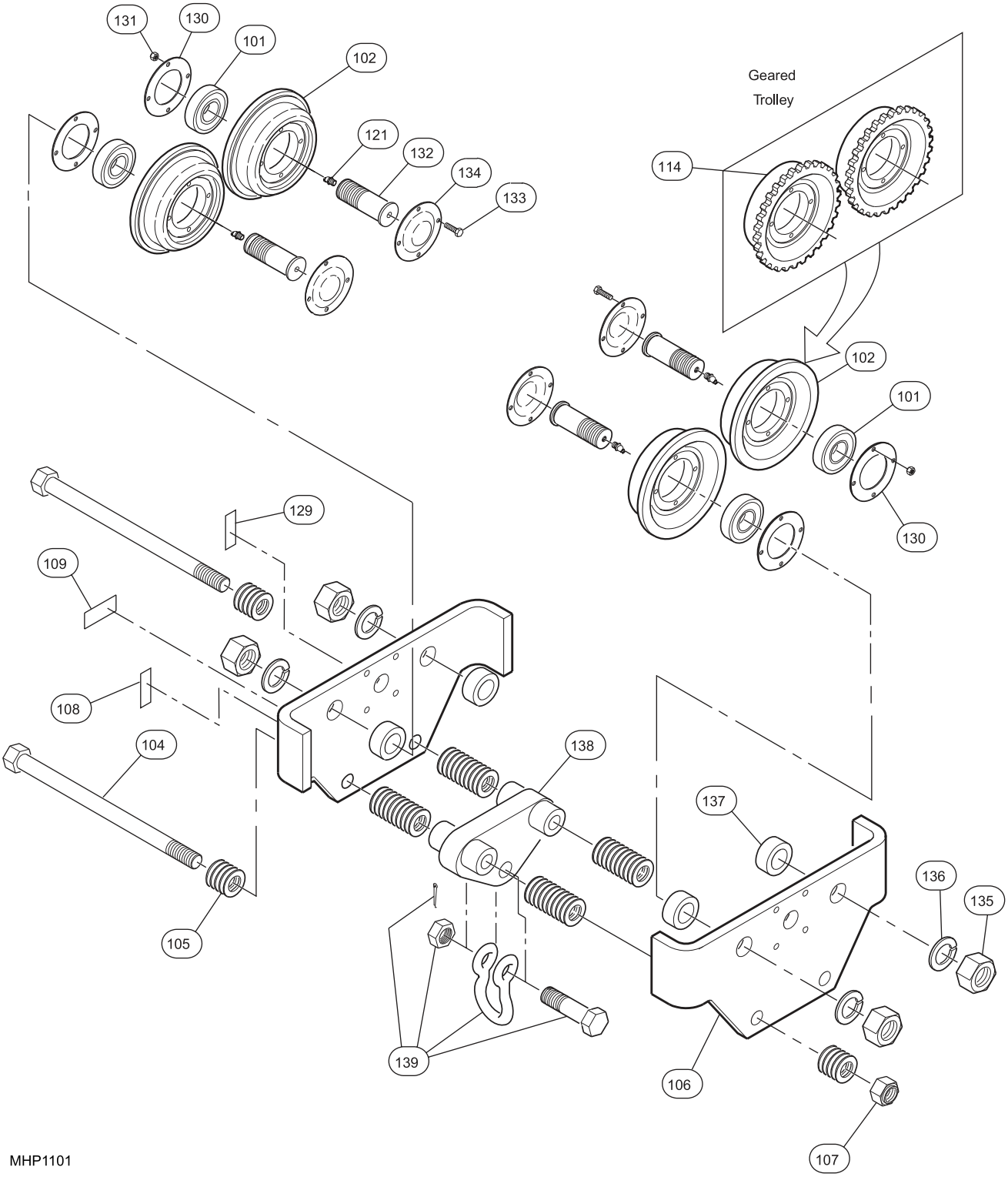

TR-KG Hand Chain Gear Drive Assembly

Figure 12. TR-KG Hand Chain Gear Drive Assembly - Exploded View

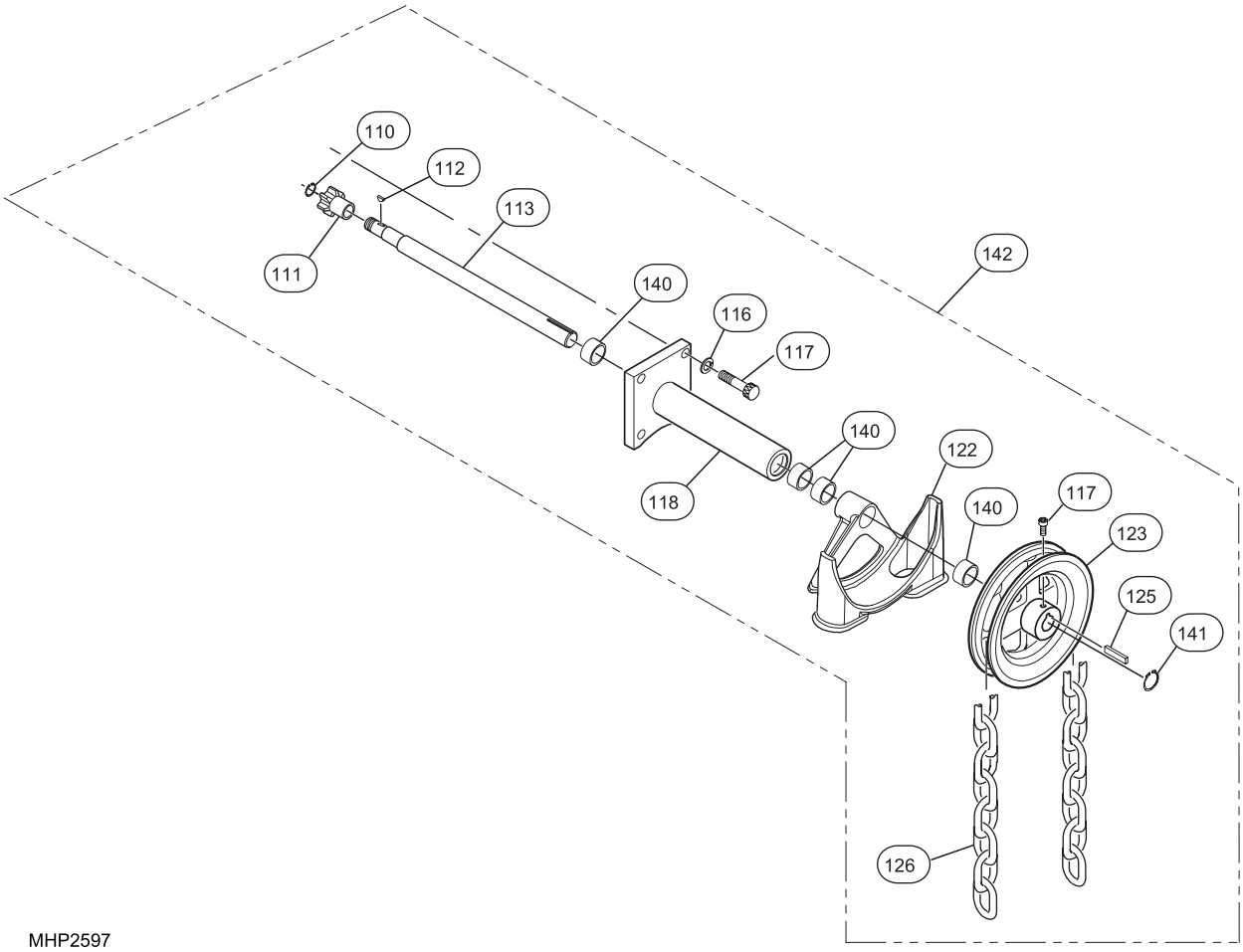

Plain and Geared Trolley Assembly

Table 2. Plain and Geared Trolley - Parts List

Item No.	Part Description	Total Qty.	Part Number		
			TIR6600	TIR132	RT010
100	Retainer Ring	4	150BM-677	—	N5000-15H
101	Bearing	4	TP223A-160	D10-956	S48486
102	Wheel Assembly, Plain (incls. items 100, 101 and 102)	4	TR-A431U	—	—
	Wheel Assembly, Bronze (incls. items 100, 101 and 102)		TR-A1431U	—	—
	Wheel, Plain (wheel only)		TR-431U	TIR132-431U	S47030
	Wheel, Plain Bronze (wheel only)		TR-1431U	TIR132-1431U	S47030SB
103	Retainer Ring	4	CE210-209	—	S5100-66
104	Suspender Bolt Assy (reference size 1 in. dia. x 11 in. long) (incls. items 104, 105 and 107)	1 Kit	TR-KFLGA	TIR132- KFLGA	—
	Suspender Bolt Assy (reference size 1 in. dia x 17 in. long) (incls. items 104, 105 and 107)		TR-KFLGD	—	—
	Suspender Bolt Assy (reference size 5/8 in.dia x 9-1/2 in. long) (includes items 104, 105 and 107)	2	—	—	RT-KFLGA
	Suspender Bolt (reference size 1 in. dia x 11 in. long)		TR-6.25FLG	—	—
	Suspender Bolt (reference size 1 in. dia x 17 in. long)		TR-12FLG	—	—
	Suspender Bolt (reference size 1-1/8 in. dia. x 14 in. long)		—	D10-439A-14	—
	Suspender Bolt (reference size 5/8 in. dia. x 9-1/2 in. long)		—	—	RT-BOLT
104A[a]	Suspender Stud (reference size 3/4 in. x 9.5 in. long)	2	43009	—	—
105	Spacer (1 in. dia. bore x 0.165 in. thick)	24 or 28	TR-223	—	—
	Spacer (3/4 in. dia. bore x 0.059 in. thick)	84	43014	—	—
	Spacer (1-1/8 in. dia. bore x 0.164 in. thick)	72	—	D10-442	—
	Spacer (5/8 in. dia. bore x 0.12 in. thick)	50	—	—	RT-223
106	Side Plate	2	TR-SIDEPLATE	TIR132-430	RT-PLATE
107	Locknut (1 in. dia.)	2	TR-440	—	—
	Locknut (5/8-11 in.dia)		—	—	RT-440
107A[a]	Locknut (3/4 in. dia.)	4	46049	—	—
108	Warning Label	1	04306445		
109	Nameplate	1	TIR-99-R	TIR13200-99-R	71300586
110	Retainer Ring	1	Order Hand Chain Kit		
111	Pinion	1	49172		
112	Key	1	Order Hand Chain Kit		
113	Shaft	1			
114	Wheel Assembly, Geared (incls. items 100, 101 and 114)	2	TR-A472U	—	—
	Wheel Assembly, Geared, Bronze (incls. items 100, 101 and 104)		TR-A1472U	—	—
	Wheel Geared (wheel only)		TR-472U	TIR132-472U	80112154

Table 2. Plain and Geared Trolley - Parts List (continued)

Item No.	Part Description	Total Qty.	Part Number		
			TIR6600	TIR132	RT010
	Wheel, Geared, Bronze (wheel only)		TR-1472U	TIR132-1472U	80114937
116	Lockwasher	4	Order Hand Chain Kit		
117	Capscrew	5			
118	Bracket	1			
122	Chain Guide	1			
123	Chain Wheel	1			
125	Key	1			
126	Hand Chain	As Req'd (ft)	HCCV020ZP (sold per ft)		
127[a]	Lockwasher	4	Y14-750	—	—
129	Warning Label	1	80116874		
130	Bearing Plate	4	—	D10-955	—
131	Nut	16	—	503-639	—
132	Wheel Shaft	4	—	D10-435A	—
133	Screw	16	—	D10-957A	—
134	Bearing Cap	4	—	D10-954	—
135	Nut	4	—	D10-305A	—
136	Lockwasher	4	—	WASHERLOCK- 1.5	—
137	Spacer	4	—	TP6-442A	—
138	Lug (hook on)	1	—	TP6-426	—
139	Shackle	1	—	TP6-425	—
140	Bushing	4	Order Hand Chain Kit		
141	Retainer Ring	1			
142	Hand Chain Kit (includes items 110 to 113, 115 to 126 and 140 to 141)	1	TR-KG		

[a] Used only with ARO and Palair Plus Hoist Adapter (213) part number 45592 shown on page 28.

Power Unit Assembly

Figure 13. Power Unit Assembly - Exploded View

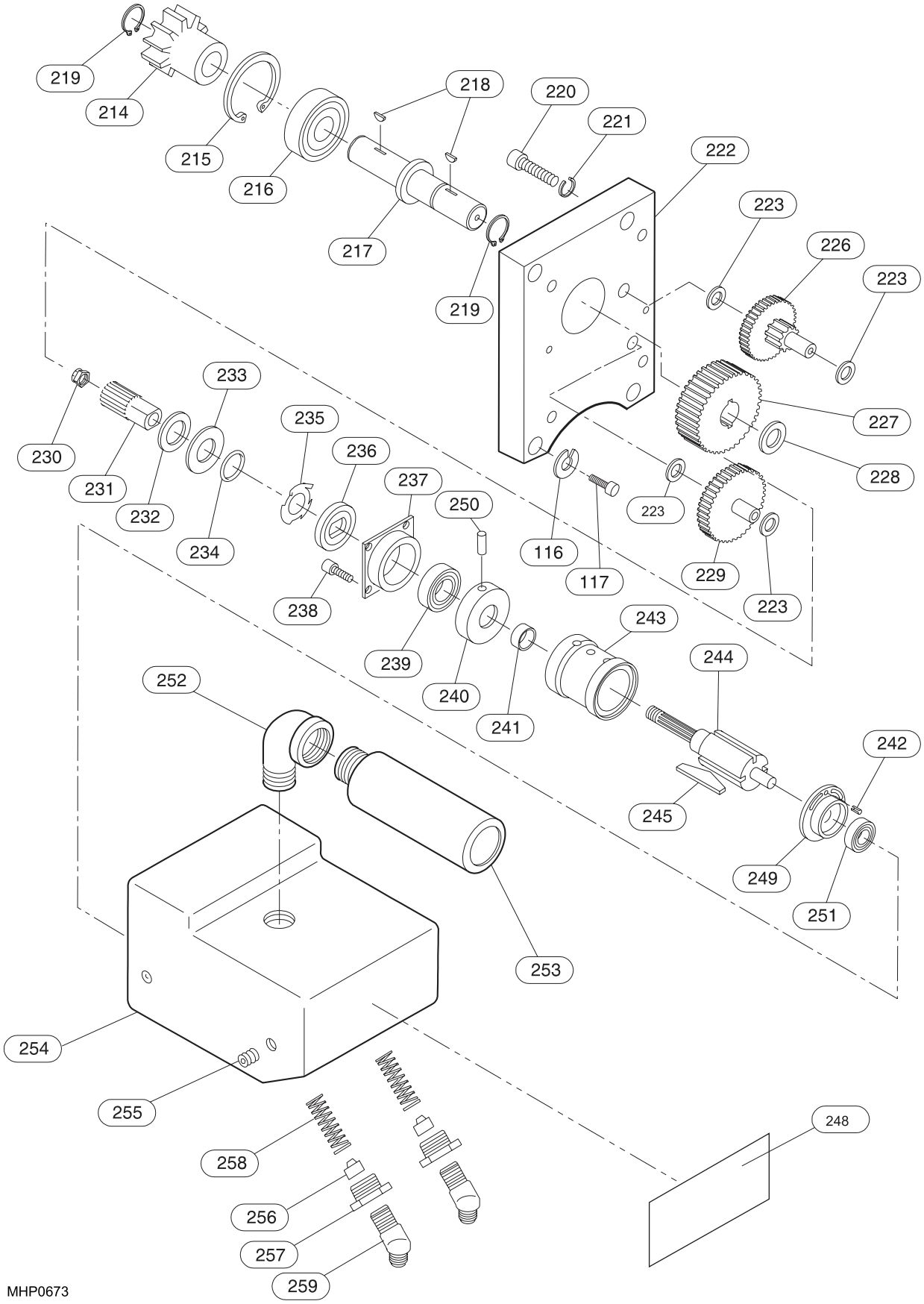

Table 3. Power Unit Assembly - Parts List

Item No.	Part Description	Total Qty.	Part Number
—	Power Unit Assembly (items 116, 117, 214 thru 259)	1	TIR-A53
—	(Motor Assembly (items 239 to 245 and 249 to 251)	1	45612
116	Lockwasher	4	96741038
117	Capscrew	4	96701446
214	Pinion Gear	1	49172
215[a]	Retaining Ring	1	Y147-16
216[a]	Bearing	1	39163
217	Spindle Shaft	1	45606
218	Key	2	37142
219	Retaining Ring	2	Y145-18
220	Capscrew	4	Y99-42
221	Lockwasher	4	Y14-416-C
222	Plate Assembly [incls. 42866 needle bearings (2)]	1	49573
223	Washer	4	Y48-14
226	Gear	1	44768
227	Gear	1	44020-1
228	Thrust Race	1	42384
229	Gear	1	44767
230	Nut	1	Y192-1-Z
231	Pinion Shaft	1	45608
232	Spacer	1	37128
233	Washer	1	73473
234[a]	"O-Ring"	1	Y325-13
235[a]	Finger Spring	1	30297
236[a]	Brake Lining	1	45619
237	Brake Cone	1	45617
238	Capscrew	4	Y154-52
239[a]	Bearing	1	30469
240	End Plate	1	45620
241	Spacer	1	30437
242	Roll Pin (included with cylinder, item 243)	2	Y178-20
243	Cylinder (incls. roll pin, item 242)	1	37683
244	Rotor	1	45605
245[a]	Rotor Blade	4	30741
248	Label Plate	1	TIR-301
249	End Plate	1	31601
250	Pin	1	32814
251[a]	Bearing	1	Y65-7
252	Elbow	1	Y43-3-C
253	Muffler	1	43874-1
254	Motor Housing (incls. bearings, plugs)	1	49581
255	Pipe Plug	2	Y227-2
256	Piston	2	45603

Table 3. Power Unit Assembly - Parts List (continued)

Item No.	Part Description	Total Qty.	Part Number
257	Inlet Adapter	2	45609
258[a]	Spring	2	45793
259	Hose Adapter	2	TR-2023-4-6S

[a] Recommended spare

Pendant Hose Assembly

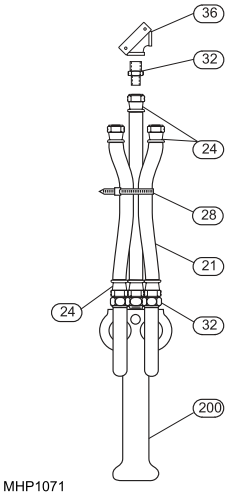

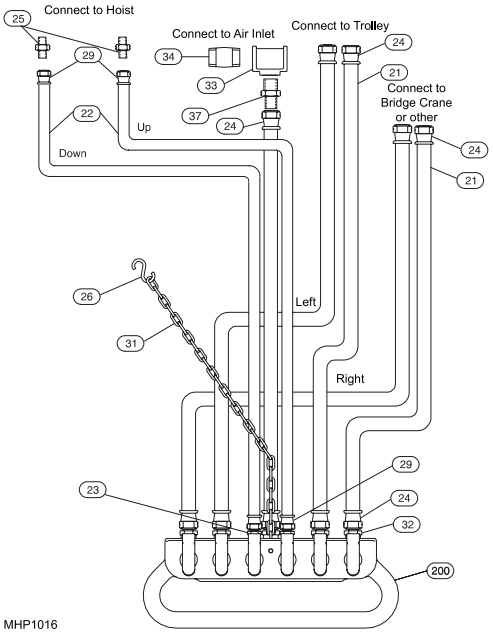

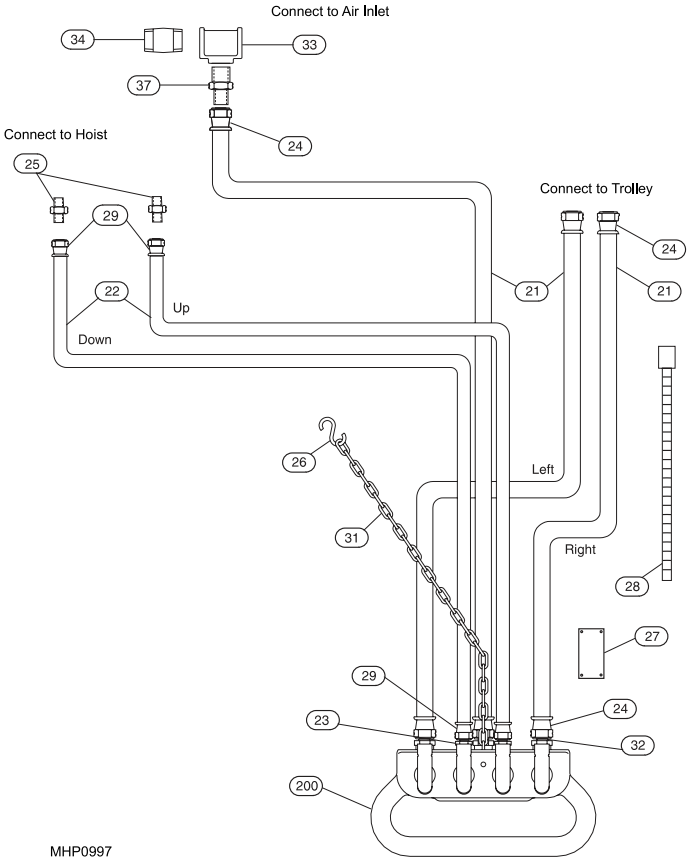

Table 4. Pendant Hose Assembly - Parts List

Item No.	Part Description	Total Qty.			Part Number
		Two Lever	Four Lever	Six Lever	
200	Pendant Assembly (Two Lever)	1			MR-269C
	Pendant Assembly (Four Lever)				HRA-A122C
	Pendant Assembly (Six Lever)				HRA-A132C
160	Pendant Housing (Two Lever)	1			Order Pendant Assembly Item 200
	Pendant Housing (Four Lever)				D02-122X
	Pendant Housing (Six Lever)				D02-132X
161	Throttle Valve	—	2		MLK-264B
162[a]	"O-Ring"	—	2		R000BR1C-283
163	Valve Cap	—	2		MLK-266A
164	Cap Gasket	2			MLK-504
165	Spring	—	2		MLK-51A
166	Lever	2	4	6	MR-273
167	Pin (Two Lever)	1	—	—	DLC-120A
	Pin (Four Lever)	—	1	—	D02-125A
	Pin (Six Lever)	—	—	1	D02-135A
168	Screw	2	5	7	MLK-SR662
169	Lockwasher	2	5	7	D02-138
170	Bushing	—	2		PILOT-263
171	Bushing	2		4	D02-263A
172	Throttle Valve	2		4	MR-264
173	"O-Ring"	—	4		AF120-289
175	Spring	2		4	D01-51A
176	Valve Cap	2		4	D02-180A
177	Fitting (Hoist Signal Hose)	—	2		UWD-170
179	Fitting (Pendant Supply and Trolley Signal Hose)	3		5	71009815
180	Pin	—	1		MR-15
181	Screw	—	1		H54U-561

[a] Recommended Spare

Trolley and Hoist Pendant Control

Figure 14. Trolley and Hoist Pendant Control Parts Drawing

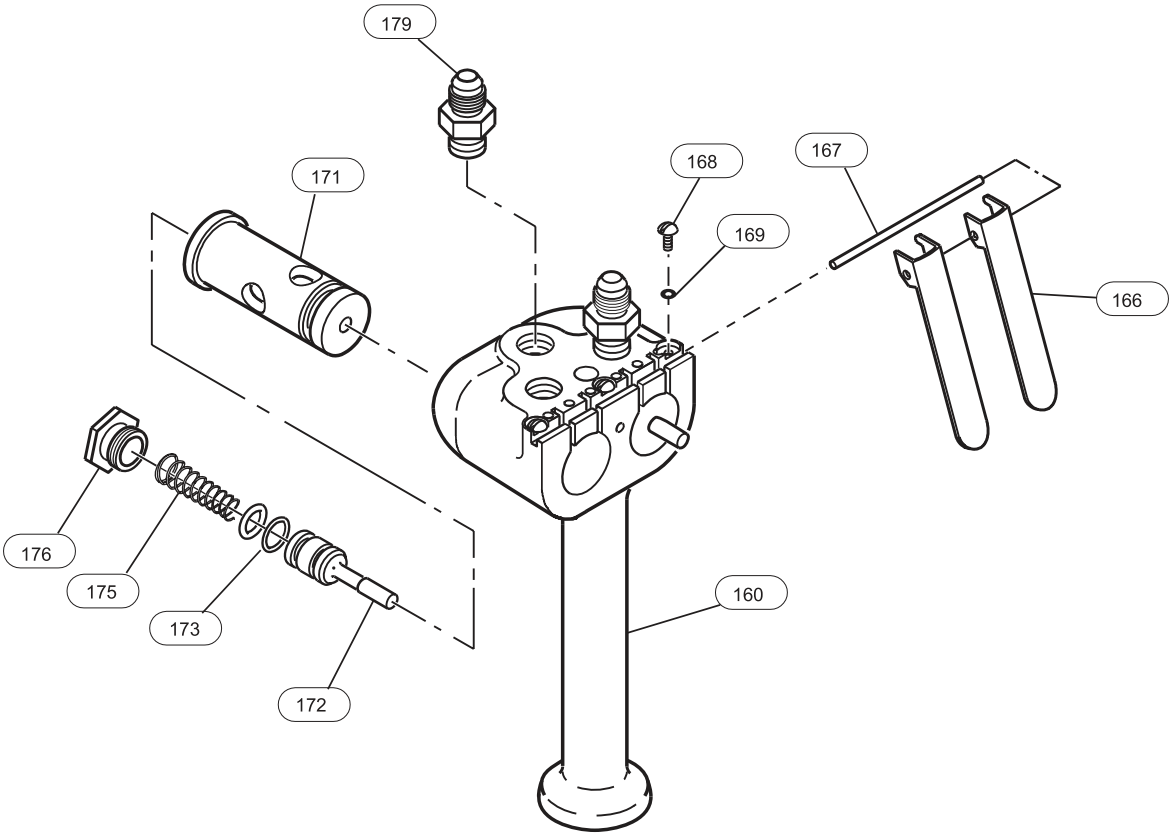

MHP1072

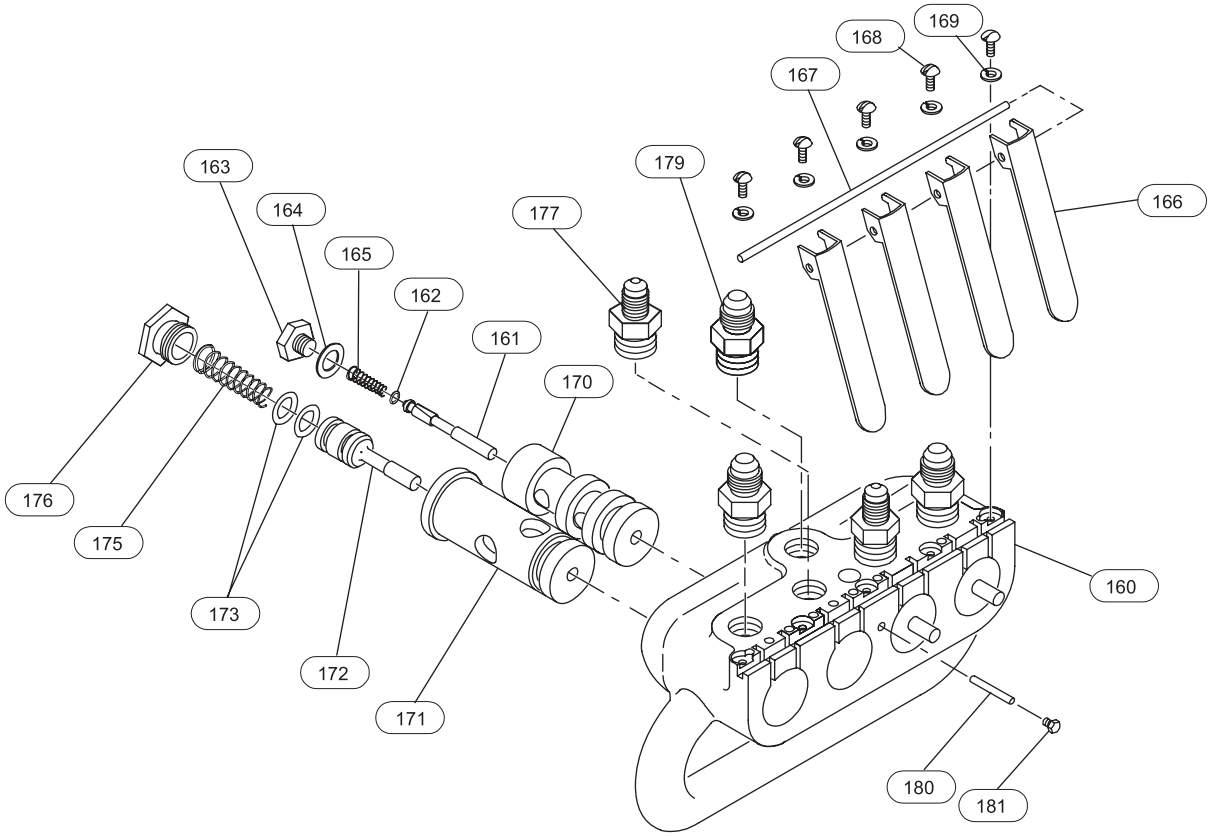

MHP1108

Table 5. Trolley And Hoist Pendant Control

Item No.	Part Description	Total Qty.			Part Number
		Two Lever	Four Lever	Six Lever	
200	Pendant Assembly (Two Lever)	1			MR-269C
	Pendant Assembly (Four Lever)				HRA-A122C
	Pendant Assembly (Six Lever)				HRA-A132C
[a]	Exhaust Valve Assembly (50 ft)	2			20417
21	Hose (Trolley Supply) 3/8 in. I.D.	Specify length in feet			BH6C
22	Hose (Hoist Signal) 1/4 in. I.D.				50923
23	Fitting, Nipple	—	2		UWD-170
24	Hose Fitting	6	6	10	53954
25	Fitting, Adapter	—	2		MLK-165
26	S-Hook	—	2		D02-421
27	Warning Tag	1			71059612
28	Tie Strap	6			HRE20A-283
29	Hose Fitting	—	4		51029
31	Strain Relief Chain (Specify Length)	—	1		CA110-B240
32	Fitting, Nipple	4	4	6	108A23S6D
33	Fitting, Pipe Tee	—	1		D01-457
34	Fitting, Pipe Nipple	—	1		AAM-287
36	Fitting, Elbow	1	—	—	MTK-581
37	Fitting, Nipple	—	1		

[a] Not Shown

TIR6600 and TIR132 Hoist Suspension Adapters and Brackets

TIR Trolley Hook on Adapter

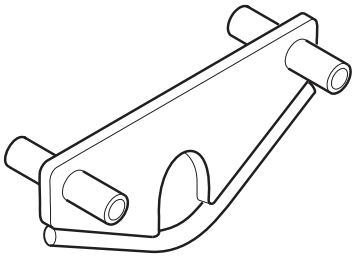

Part No. TIR-426

ARO (7700 and 7790 Series) Hoist Adapter 'D' Flange

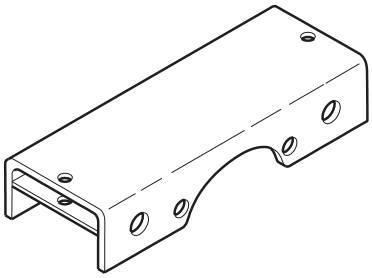

Part No. 49560

HLK Hoist Adapter

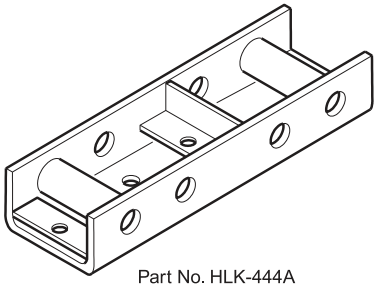

Part No. HLK-444A

Palair Plus and ARO (7700 Series) Hoist Adapter 'A' Flange

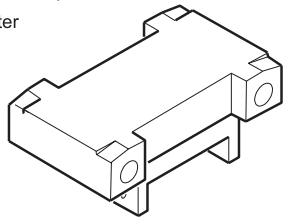

Part No. PAL-444TIR* (Palair Plus)
Part No. 455 92* (ARO)
(*Qty. 2 roll pins included)

MLK Hoist Adapter

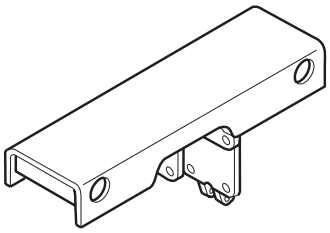

Part No. MLK-444TIR

MHP0619

RT010 Hoist Suspension Adaptors and Brackets

Palair Hoist Adapter
'A' Flange

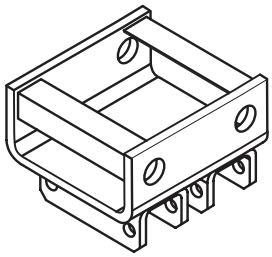

Part No. 80138258

ARO 7700 Series Hoist
Adapter 'A' Flange

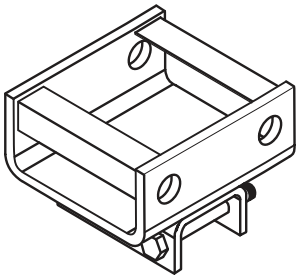

Part No. ARO-RT
(includes Bolts)

MLK 1/2 t
Hoist Adapter

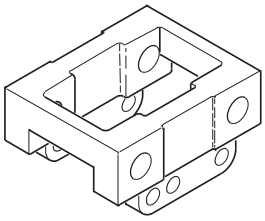

Part No. MR10-425

MLK/HLK 1t
Hoist Adapter

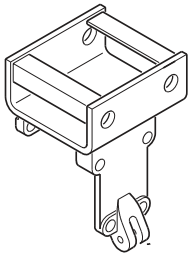

Part No. ML1000K-425

MHP1046

Parts shown on this page are referenced as item 213 throughout the manual.

Accessories

Description	Part No.
Lubricant	LUBRI-LINK-GREEN
Grease (EP#1)	ARO 33153
Spindle Oil	ARO 29655
Lubricator (1/2 inch NPT inline)	L20-04-000
Lubricator (1/2 inch BSP inline)	L26-04-A29
Air Filter NPT	F20-04-000
Air Filter BSP	F26-C4-A29

Related Documentation

The following Operation and Maintenance Manuals will provide additional information on the hoists which can be used with these trolleys.

Document	Form No.
MLK Air Hoist	P6554
HLK Air Hoist	P6587
Pendant Assembly (MLK/HLK Hoist)	P6778
Palair Plus Air Hoist	MHD56043
Palair Premium Air Hoist	SAM0040
ARO 7700 Series Air Hoist (includes pendant information)	2025-2 (order No. 49999-240)
ARO 7790 Series Air Hoist (includes pendant information)	2062-2

Parts and Maintenance

⚠ CAUTION

The use of other than genuine Ingersoll Rand replacement parts may result in safety hazards, decreased motor performance, and increased maintenance, and may invalidate all warranties. Ingersoll Rand is not responsible for customer modification of motors for applications on which Ingersoll Rand was not consulted. Repairs should be made only by authorized trained personnel. Consult your nearest Ingersoll Rand Authorized Service center.

When the life of the product has expired, it is recommended that it be disassembled, degreased and parts be separated by material so that they can be recycled.

Manuals can be downloaded from ingersollrandproducts.com

Refer all communications to the nearest **Ingersoll Rand** office or distributor.

Ingersoll Rand (NYSE: IR) advances the quality of life by creating comfortable, sustainable and efficient environments. Our people and our family of brands—including Club Car®, Ingersoll Rand®, Thermo King® and Trane®—work together to enhance the quality and comfort of air in homes and buildings; transport and protect food and perishables; and increase industrial productivity and efficiency. We are a global business committed to a world of sustainable progress and enduring results.

ingersollrand.com

Ingersoll Rand has a policy of continuous product and product data improvements and reserves the right to change design and specifications without notice.
We are committed to using environmentally conscious print practices.

MHD56083-EN 07 Apr 2017
Supersedes ed_3-EN (January 2004)

©2017 Ingersoll Rand