# Air Chain Hoist

MLK Series

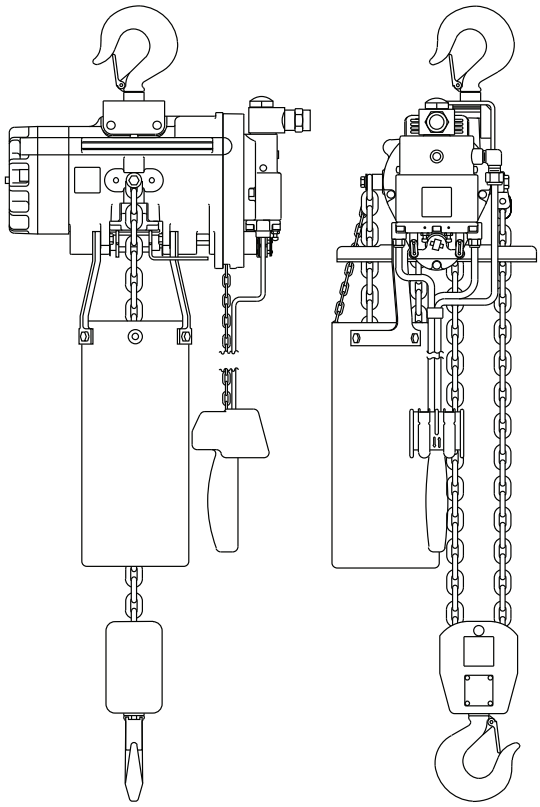

# Product Parts Information

**Save These Instructions**

Ingersoll Rand®

Edition 2
March 2020
CCN 47112669

When product life has expired, it is recommended to:

- disassemble the product
- degrease the product
- separate product parts by material for correct recycling

Product repair and maintenance should be conducted by an authorized service center.

Refer all communications to the nearest **Ingersoll Rand** office or distributor.

Manuals are available at ingersollrandproducts.com

**Table 1. Product Information Manuals**

| Publication | CCN |
|---|---|
| Product Safety Information Manual | MHD56295 |
| Product Information Manual | 47112677 |
| Product Maintenance Information Manual | 47099007 |

# Table of Contents

Parts Ordering Information . . . . . 4
Return Goods Policy . . . . . 4
Disposal . . . . . 4
Hoist Assembly . . . . . 5
Hoist Sub-Assembly . . . . . 11
Pendant and Hose Assembly . . . . . 14
Single Line Hoist Hook Assembly . . . . . 16
Single Line Hoist Hook Assembly (spark resistant) . . . . . 18
Double Line Hoist Hook Assembly . . . . . 19
Trolley Assembly . . . . . 21
Installation Instructions for Fabric Container Kits . . . . . 23
Accessories . . . . . 25
Repair and Conversion Kits . . . . . 26

# Parts Ordering Information

These products are designed and constructed to provide long, trouble-free service. In time it may be necessary to order and install new parts to replace those that have been subjected to wear.

For your convenience and future reference, it is recommended that the following information be recorded.

**Model Number**_____

**Serial Number**_____

**Date Purchase**_____

When ordering replacement parts, please specify the following:

1. Complete model number and serial number as it appears on the data (name) plate.
2. Part number(s) and part description as shown in this manual.
3. Quantity required.

The data (name) plate is located on the product.

***NOTICE***

- **Continuing improvement and advancement of design may cause changes to this equipment which are not included in this manual. Manuals are periodically revised to incorporate changes. Always check the manual edition number on the front cover for the latest issue.**
- **Sections of this manual may not apply to your product.**
- **The use of other than genuine Ingersoll Rand replacement parts may result in safety hazards, decreased performance and increased maintenance, and will invalidate all warranties.**

## Return Goods Policy

**Ingersoll Rand** will not accept any returned goods for warranty or service unless prior arrangements have been made and written authorization has been provided from the location the goods were purchased.

Products that have been modified without **Ingersoll Rand** approval, mishandled or overloaded will not be repaired or replaced under warranty. A printed copy of the warranty that applies to this product is provided inside the back cover of the product information manual or in some cases the parts manual.

## Disposal

When the life of the product has expired, it is recommended that it be disassembled, degreased and parts separated as to materials so that they may be recycled.

Refer all communications to the nearest **Ingersoll Rand** Office or Distributor.

# Hoist Assembly

**Figure 1. MHP3259**

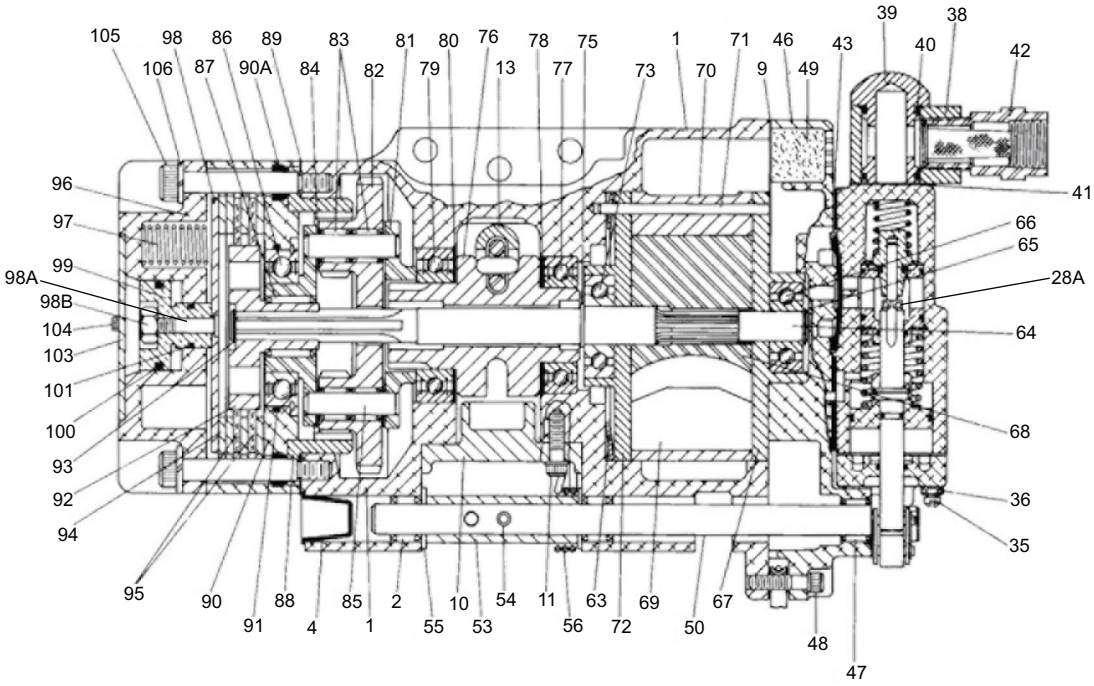


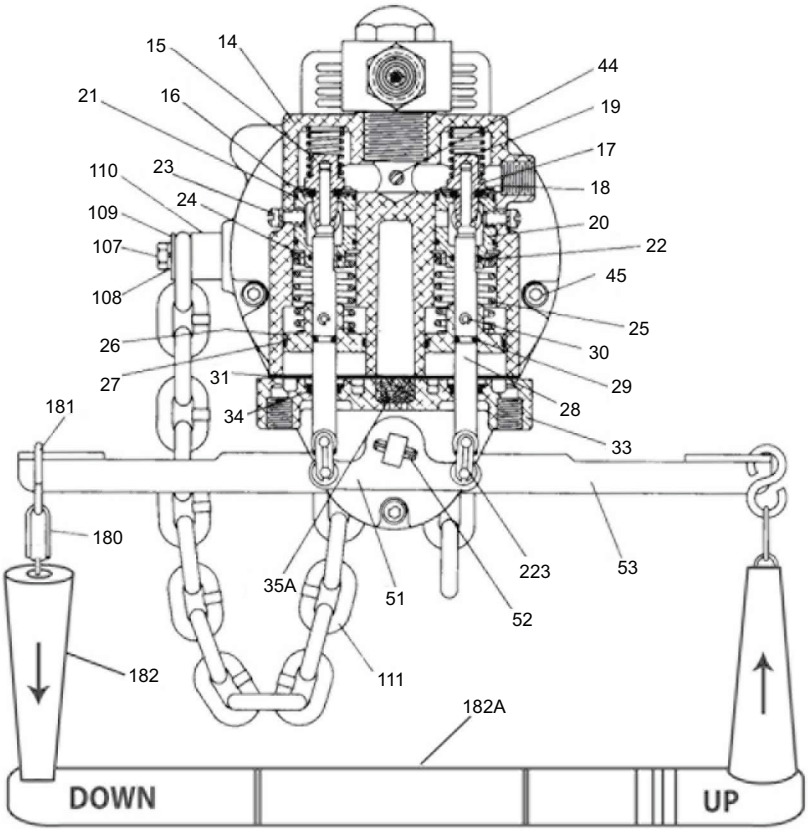

**Table 2. Hoist Assembly — Parts List**

| Item | Part Description | Total Qty | Part Number |
|---|---|---|---|
| 1 | Housing Assembly **(note 1)** | 1 | ML50K-A300-S |
| [a] 2 | Throttle Shaft Bearing | 2 | R38M-603 |
| 3 | Vent Plug | 1 | P250-546 |
| 4 | Throttle Shaft Plug | 1 | ML50K-29 |
| [b] [c] 5A | Nameplate | 1 | MLK-301N |
| [b] [d] 5B | Nameplate | 1 | MLK-301M-RS |
| [b] 6 | Nameplate Screw | 2 | R4K-302 |
| 7 | Warning Label | 1 | 71289326 |
| [a] 9 | Housing Gasket | 1 | ML50K-445 |
| 10 | Chain Guide | 1 | ML-741C |
| 11 | Chain Guide Screw (pack of 4 use 4) | 1 | 34U-463-4 |
| [b] 12 | Lockwasher | 4 | 4U-58-10 |
| 13 | Chain Guard | 2 | ML-6A |
| [b] 13A | Guard Retaining Screw | 2 | G57T-634 |
| [b] 13B | Lockwasher (pack of 10 use 2) | 1 | L01-67-10 |
| - - - | Valve Chest Assembly **(note 2)** | 1 | MLK-A545B |
| 14 | Valve Chest | 1 | MLK-545A |
| 15 | Up Valve Assembly | 1 | MLK-K102U |
| [a] 16 | Up Valve Seal | 1 | MLK-211 |
| 17 | Down Valve Assembly | 1 | MLK-K1102D |
| [a] 18 | Down Valve Seal | 1 | MLK-211 |
| 19 | Valve Spring | 2 | MLK-942A |
| 20 | Valve Seat Assembly **(note 3)** | 2 | MLK-K615 |
| [a] 21 | Valve Seat Seal | 2 | C321-606 |
| [a] 22 | Valve Seat Shaft Seal | 1 | R000BR-210 |
| 23 | Valve Seat Lock Screw | 2 | AF160-305 |
| [a] 24 | Valve Seat Retainer | 2 | MLK-218 |
| 25 | Piston Spring | 2 | MLK-250A |
| 26 | Piston Assembly | 2 | MLK-K246A |
| [a] 27 | Piston Seal | 1 | HLK-103 |
| 28 | Piston Shaft Assembly **(note 4)** | 2 | MLK-K655A |
| 28A | O-Ring | 1 | Y330-006 |
| [a] 29 | Piston Shaft Seal | 1 | R0BR1C-283 |
| 30 | Piston Retaining Pin | 1 | 510-669A |
| 31 | Valve Chest Cover Gasket | 1 | MLK-117A |
| 32 | Valve Chest Cover Pin | 2 | MLK-241 |
| 33 | Valve Chest Cover Assembly **(note 5)** | 1 | MLK-A238A |
| [a] 34 | Valve Chest Cover Seal | 2 | R000BR-210 |
| 35 | Bleed Adjustment Screw | 2 | MLK-370 |
| 35A | Muffler | 2 | MLK-236 |
| 36 | Adjustment Screw Locknut | 2 | Q1-121 |
| 37 | Valve Chest Cover Screw | 6 | MLK-240 |

**Table 2. Hoist Assembly — Parts List (continued)**

| Item | Part Description | Total Qty | Part Number |
|---|---|---|---|
| - - - | Swivel Inlet Assembly **(note 6)** | 1 | MLK-A4 |
| 38 | Inlet Body | 1 | MLK-166 |
| 39 | Inlet Nipple | 1 | MLK-4A |
| (a) 40 | Swivel Inlet Seal | 2 | R4–210 |
| (a) 41 | Swivel Inlet Gasket | 1 | R18LF-21 |
| 42 | Inlet Strainer | 1 | MLK-82 |
| (a) (c) 43 | Valve Chest Gasket (2 round) | 1 set | MLK-928-80 |
| 44 | Valve Chest Screw | 1 | 518-104 |
| 45 | Valve Chest Screw (pack of 4 use 2) | 1 | R0H-354-4 |
| 46 | Valve Chest Plate | 1 | MLK-549 |
| (a) 47 | Throttle Lever Bearing | 1 | R38M-603 |
| 48 | Valve Chest Plate Screw (pack of 4 use 5) | 2 | 5080-638-4 |
| 49 | Muffler | 2 | MLK-175 |
| 50 | Throttle Shaft | 1 | MHLK-255 |
| 51 | Limit Actuator | 1 | MLK-251A |
| 52 | Limit Actuator Retaining Pin | 1 | WF171-15 |
| 53 | Throttle Lever | 1 | ML50K-556 |
| 54 | Throttle Lever Retaining Pin | 1 | WF171-15 |
| 55 | Throttle Lever Thrust Washer | 2 | MR-458 |
| 56 | Throttle Shaft Spring | 1 | MR-412 |
| 57 | Brake Tube | 1 | ML50K-401 |
| 58 | Brake Tube Seal | 2 | ML50K-21 |
| 59 | Brake Tube Housing Seal | 1 | PS3-67 |
| 63 | Motor Retaining Washer | 1 | MR-207 |
| - - - | Motor Assembly **(note 7)** | | |
| | ML250K, ML500K and ML1000K | 1 | MLK-A53A |
| | ML250KR, ML250KS, ML500KR, ML500KS, and ML1000KS | | MLK-AR53A |
| - - - | Motor Shaft Kit **(note 8)** | 1 | ML50K-316 |
| 64 | Motor Shaft | 1 | Order Kit |
| (a) 65 | Motor Shaft Rear Retaining Ring | 1 | MLK-120 |
| (a) 66 | Rear End Plate Bearing | 1 | R2-24 |
| 67 | Rear End Plate | 1 | MR-12 |
| 68 | Rotor | 1 | MR-53 |
| (a) 69 | Vane Packet with Springs | 1 Set | MLK-K4243-7 |
| 69A | Vane Springs | 1 Set | MLK-43-7 |
| 70 | Cylinder | | |
| | ML250K, ML500K and ML1000K | 1 | MR-3A |
| | ML250KR, ML250KS, ML500KR, ML500KS, and ML1000KS | | MLK-R3 |
| 71 | Cylinder Dowel | | R3H-434 |
| 72 | Front End Plate | 1 | MR-11 |
| (a) 73 | Front End Plate Bearing | 1 | TB-394 |
| (a) 75 | Motor Shaft Front Retaining Ring | 1 | MLK-119 |

**Table 2. Hoist Assembly — Parts List (continued)**

| Item | Part Description | Total Qty | Part Number |
|---|---|---|---|
| 76 | Chain Wheel | 1 | ML-740B |
| (a) 77 | Chain Wheel Plain End Bearing | 1 | MR-593 |
| 78 | Chain Wheel Plain End Washer | 1 | MR-974 |
| (a) 79 | Chain Wheel Splined End Bearing | 1 | MR-988 |
| 80 | Chain Wheel Splined End Washer | 1 | MR-975 |
| - - - | Gear Frame Assembly **(note 9)** | | |
| | ML250K and ML250KS | 1 | ML25K-A8 |
| | ML500K, ML500KS, ML1000K, ML1000KS, ML250KR, and ML500KR | | ML50K-A8 |
| 81 | Planet Gear Frame | | |
| | ML250K and ML250KS | 1 | ML25K-8 |
| | ML500K, ML500KS, ML1000K, ML1000KS, ML250KR, and ML500KR | | ML50K-8 |
| 82 | Planet Gear Assembly **(note 10)** | | |
| | ML250K and ML250KS | 2 | MR5-A10 |
| | ML500K, ML500KS, ML1000KS, ML250KR, and ML500KR | | MR-A10 |
| (a) 83 | Planet Gear Bearing (2 each/gear) | 1 | ML50K-654 |
| 84 | Planet Gear Thrust Washer | 4 | ML50K-361 |
| 85 | Planet Gear Shaft | 2 | MR-191 |
| 86 | Gear Frame Bearing | 1 | ML50K-97 |
| (a) 87 | Brake Driver Bearing | 1 | ML50K-318 |
| 88 | Ring Gear | 1 | ML50K-406A |
| (a) 89 | Ring Gear Gasket | 1 | ML50K-31 |
| 90 | Brake Housing | 1 | ML50K-346 |
| (a) 90A | Brake Housing Bolt Seal | 4 | ML50K-271 |
| (a) 91 | Brake Housing Bearing Seal | 1 | HRA20A-990 |
| 92 | Brake Driver | 1 | ML50K-842 |
| (a) 93 | Brake Driver Retainer | 1 | ML50K-729 |
| 94 | Brake Plate | 4 | ML50K-834A |
| (a) 95 | Brake Disc Kit **(note 11)** | 1 Set | MLK-ABK1 |
| 96 | Brake Spring, Piston Housing Assembly **(note 12)** | 1 | MLK-A395A |
| 97 | Spring | 3 | MLK-832 |
| 98 | Pressure Plate Assembly | 1 | ML50K-K338A |
| 98A | Pressure Plate Screw | 1 | ML50K-805A |
| 98B | Piston Nut | 1 | ML50K-394 |
| 99 | Piston Assembly | 1 | ML50K-A809 |
| (a) 100 | Piston Large Seal | 1 | R2C-103 |
| (a) 101 | Piston Small Seal | 1 | MLK-210 |
| 103 | Plate | 1 | ML50K-981 |
| 104 | Plate Screw | 2 | 47534454001 |
| 105 | Shoulder Bolt | 4 | ML50K-7 |
| 106 | Lockwasher (pack of 10 use 4) | 1 | D02-321-10 |
| 107 | Chain Anchor Bolt | 1 | R0H-354 |

**Table 2. Hoist Assembly — Parts List (continued)**

| Item | Part Description | Total Qty | Part Number |
|---|---|---|---|
| 108 | Lockwasher (pack of 10 use 1) | 1 | L01-67-10 |
| 109 | Flat Washer | 1 | B12-265 |
| 110 | Chain Anchor Bolt Spacer | 1 | ML50K-145 |
| 111 | Load Chain **(note 13)** | | |
| | Zinc Plated Chain | (e) | M745Z |
| | ML250KR and ML500KR only Stainless Steel | | M745S |
| (b) (c) | IR Label (for Valve Chest) | 1 | HRA20A-201 |
| (b) (d) | IR Label (for Valve Chest) | 1 | 47150743 |
| (b) | IR Label (for Brake Plate) | 1 | 48379846 |
| (b) | Bleed Screw Adjustment Tag | 1 | TA-INS-150 |
| 180 | Pull Chain (specify total length for (2) Chains required) | | |
| | Standard Hoists | (e) | 37657-XXX-X |
| | Spark Resistant Hoists | | D02-1413 |
| - - - | Pull Chain Hardware Kit | 1 | MLK-K415A |
| 181 | S-Hook | 2 | 37659 |
| 182 | Handle | 2 | 33268 |
| 182A | Control Handle | 1 | 33322 |
| (b) 182B | Anchor Chain | 2 | 37723 |
| 183 | 1/4 in. Pipe Plug | 1 | R0H-377 |
| 184 | Pipe Plug | 2 | P250-546 |

(a) Recommended Spare
(b) Indicates Not Illustrated
(c) For Serial Numbers Starting with WI
(d) For Serial Numbers Starting with SPH or KTW
(e) Specify length in feet

**Table 3. Kits and Notes Information**

| Item | Part Description | Total Qty | Part Number |
|---|---|---|---|
| **Note 1** | Housing Assembly (includes 2–7) | 1 | ML50K-A300-S |
| **Note 2** | Valve Chest Assembly (includes 14–42) | 1 | MLK-A545B |
| **Note 3** | Valve Seat Assembly (includes 21 and 22) | 2 | MLK-K615 |
| **Note 4** | Piston Shaft Assembly (includes 28A, 29, and 30) | 2 | MLK-K655A |
| **Note 5** | Valve Chest Cover Assembly (includes 34) | 1 | MLK-A238A |
| **Note 6** | Swivel Inlet Assembly (includes 38–42) | 1 | MLK-A4 |
| **Note 7** | Motor Assembly (includes 64–73, and 75) | 1 | - - - |
| | ML250K, ML500K and ML1000K | | MLK-A53A |
| | ML250KR, ML250KS, ML500KR, ML500KS, and ML1000KS | | MLK-AR53A |
| **Note 8** | Motor Shaft Kit (includes 64, 65, 75, and 93) | 1 | ML50K-316 |
| **Note 9** | Gear Frame Assembly (includes 81–87) | 1 | - - - |
| | ML250K, ML500K and ML1000K | | ML25K-A8 |
| | ML250KR, ML250KS, ML500KR, ML500KS, and ML1000KS | | ML50K-A8 |
| **Note 10** | Planet Gear Assembly (includes 83) | 1 | - - - |
| | ML250K, ML500K and ML1000K | | MR5-A10 |
| | ML250KR, ML250KS, ML500KR, ML500KS, and ML1000KS | | MR-A10 |
| **Note 11** | Brake Disc Kit (includes 97, 100, and 101) | 1 | MLK-ABK1 |
| **Note 12** | Brake Spring and Piston Housing Assembly (includes 97–104) | 1 | MLK-A395A |
| **Note 13** | When ordering "Length as Specified "chain for ML250KS, ML500KS or ML250KR Hoists, specify a chain length 2 feet longer than the required lift. When ordering " Length as specified " for ML1000KS or ML500KR Hoists specify a length 3 feet longer than twice the required lift. Chains for the ML1000KS and ML500KR Hoists must contain an even number of Links when installed on the hoist. | | - - - |

# Hoist Sub-Assembly

**Figure 2. Exploded View — MHP3242**

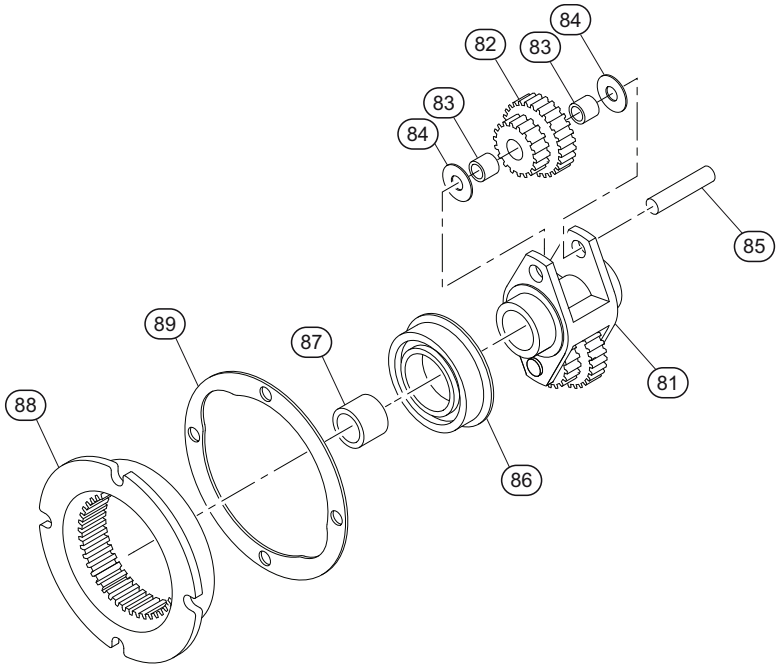


**Figure 3. Exploded View — MHP3243**

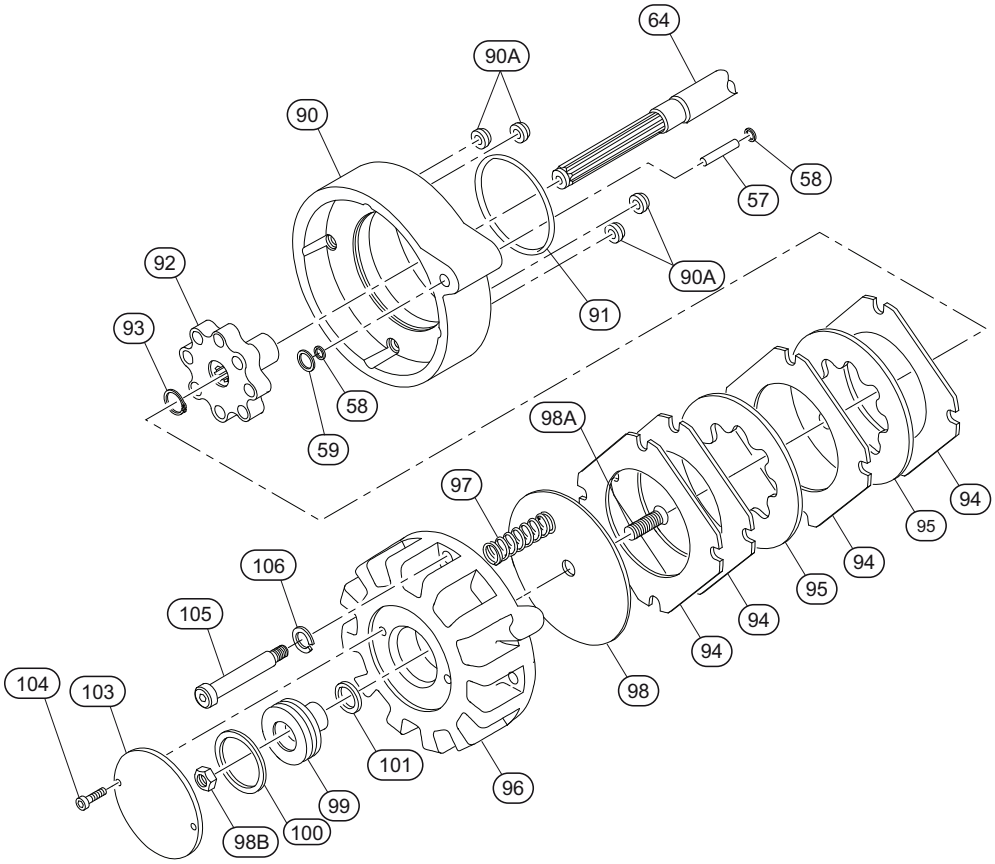

**Figure 4. Motor Parts Exploded View — MHP3240**

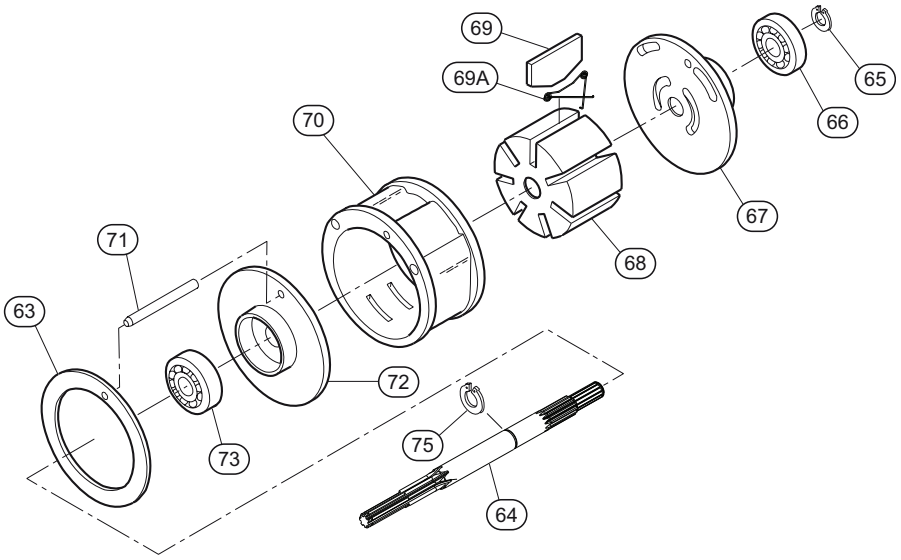


**Figure 5. Chain Wheel Assembly Exploded View — MHP3239**

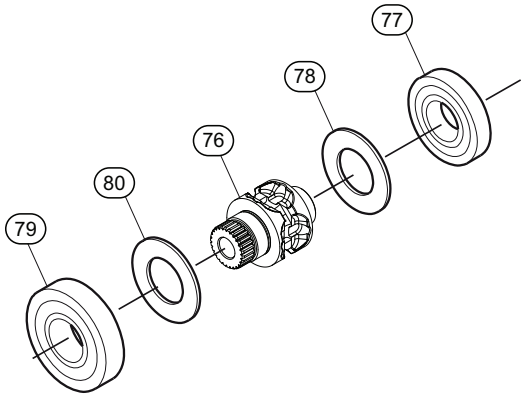

**Figure 6. Exploded View — MHP3238**

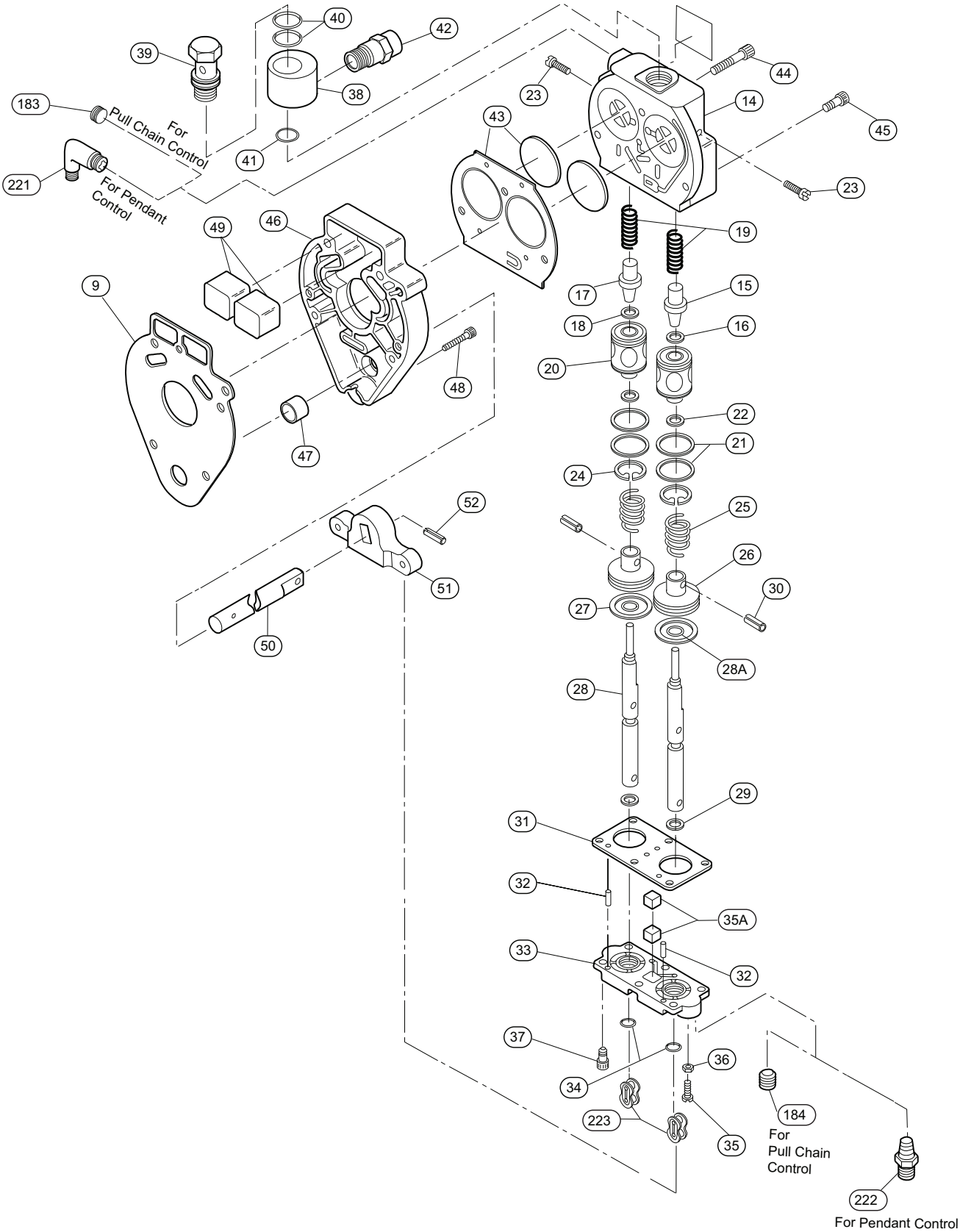

# Pendant and Hose Assembly

**Figure 7. Exploded View — MHP3241**

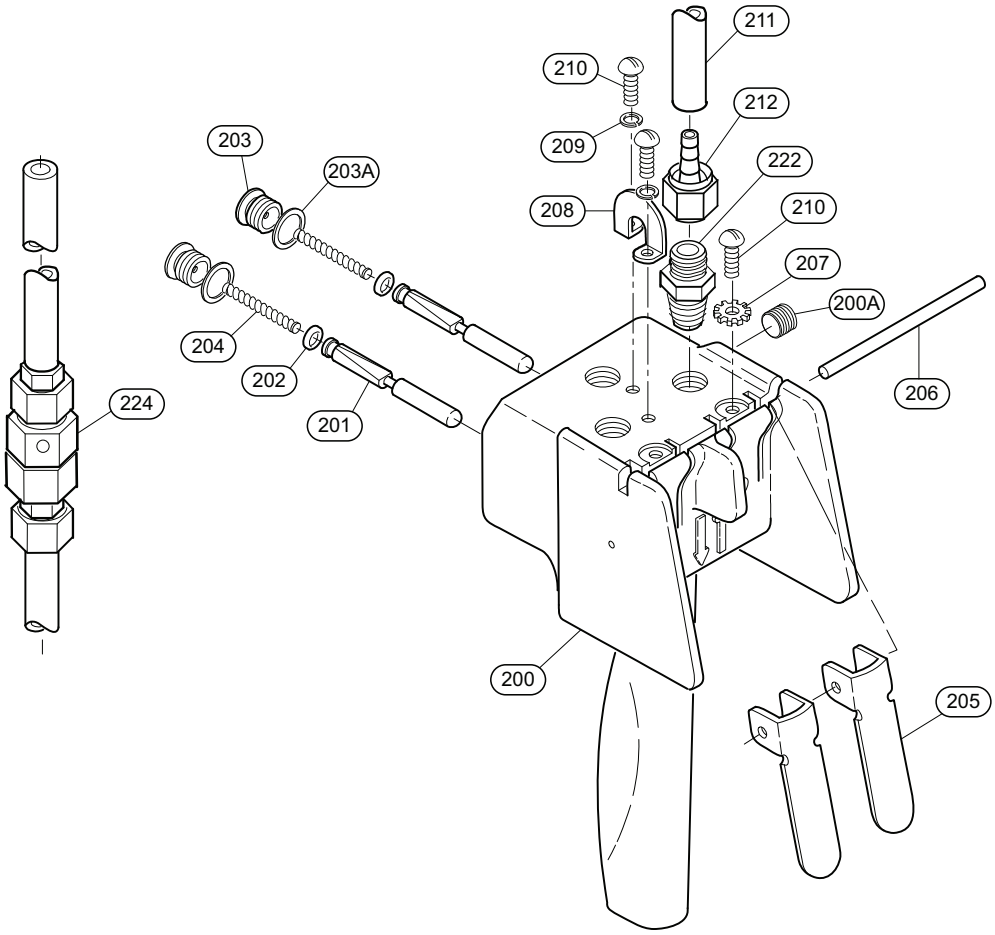


**Figure 8. MHP3245**

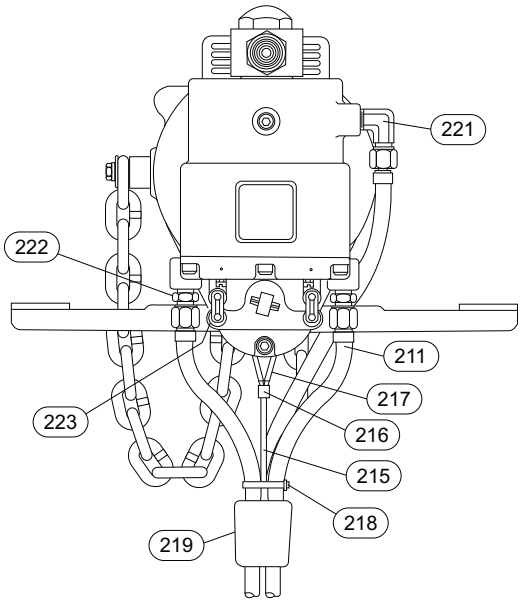


**Figure 9. 04612776**

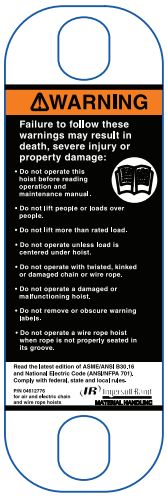

**Table 4. Pendant and Hose Assembly — Parts List**

| Item | Part Description | Total Qty | Part Number |
|---|---|---|---|
| 200 | Pendant Handle Assembly | 1 | MLK-K269C |
| 200A | Plug | 1 | 502-95 |
| 201 | Pendant Throttle Valve Assembly | 2 | MLK-K264B |
| [a] 202 | Throttle Valve O-Ring | 2 | R000BR1C-283 |
| 203 | Pendant Throttle Valve Cap | 2 | MLK-K266A |
| 203A | Pendant Throttle Valve Cap Gasket | 1 | MLK-504 |
| [a] 204 | Pendant Throttle Valve Spring | 1 | MLK-51A |
| 205 | Pendant Throttle Lever | 2 | MLK-273 |
| 206 | Throttle Lever Pin | 1 | DLC-120A |
| 207 | Pin Lockwasher | 2 | D02-138 |
| 208 | Strain Relief Support | 1 | MLK-450 |
| 209 | Relief Support Lock Washer (Pack of 10 use 1) | 1 | H54U-352-10 |
| 210 | Handle Screw | 4 | HRE20A-68 |
| 211 | Hose | [b] | 50923 |
| 212 | Swivel Fitting | 6 | 51029 |
| - - - | Strain Relief Assembly | 1 | MLK-LWR3A |
| 215 | Strain Relief Cable | [b] | 33323-XXX-XX |
| [c] 216 | Clamping Sleeve | 2 | 32356 |
| 217 | Clamping Thimble | 2 | 31477 |
| [d] 218 | Hose Tie | [b] | HRE20A-283 |
| 219 | Warning Tag | 1 | 04612776 |
| [e] | Spark Resistant Tag | 1 | MLKR-33 |
| [e] | Spark Resistant Tag Fastener | 2 | CE110-4 |
| [a] 221 | Elbow 1/4” NPT to 7/16”- 20 | 1 | UWD-161 |
| 222 | Adapter | 5 | MLK-165 |
| 223 | Pendant Link | — | MLK-224 |
| [f] 224 | Quick-Exhaust Valve | 2 | MLK-A939 |

[a] Recommended Spare
[b] Specify length in feet
[c] A crimping tool [(Nicropress Tool with Groove Size G or compatible crimping tool) is required to install the Clamping Sleeves (216).]
[d] Use 3 per 5 feet of Pendant hose length and 2 per each additional feet of hose.
[e] Indicates Not Illustrated
[f] Refer to Form P6778 for parts information on Pendant Throttle Handle Assemblies for Two and Three motor functions.

# Single Line Hoist Hook Assembly

**Figure 10. Exploded View — MHP3247**

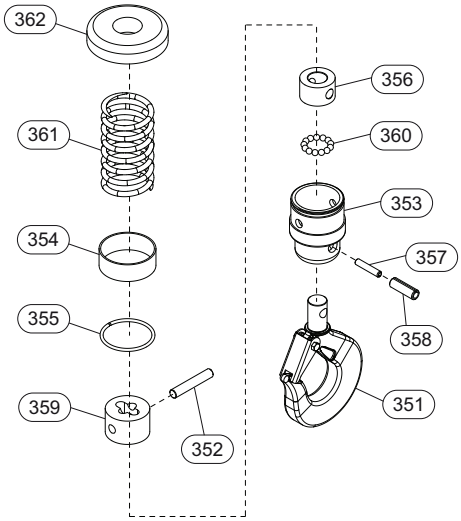


**Figure 11. Exploded View — MHP3248**

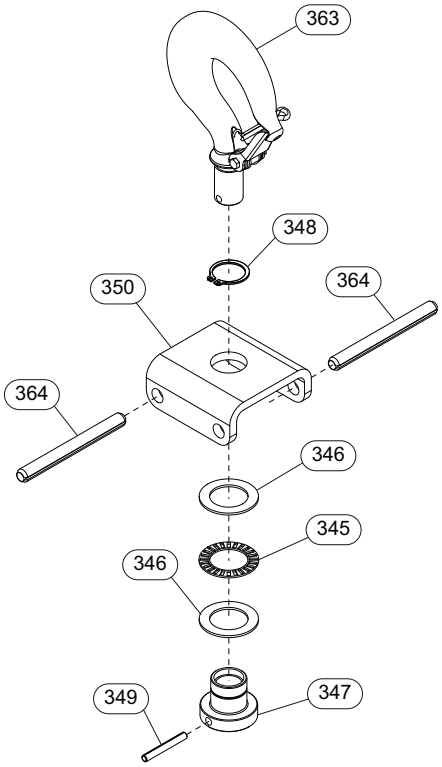

**Table 5. Single Line Hoist Hook Assembly — Parts List**

| Item | Part Description | Total Qty | Part Number | |
|---|---|---|---|---|
| | | | Standard (1/2t max) | |
| | | | ML250K, ML250KS, ML500K and ML500KS | |
| | | | Standard Steel | Bullard Burnham |
| **Bottom Block Assembly** | | | MLK-K378 | MLK-KBB378 |
| [a] 351 | Hook Assembly (includes Latch Kit) | 1 | 35006-ARO | 35201 |
| [a] | Latch Kit | 1 | 35023 | - - - |
| 352 | Pin | 1 | MLK-553 | |
| 353 | Bucket | 1 | 47114277 | |
| 354 | Sleeve | 1 | 35017 | |
| 355 | Retaining Ring | 1 | 35016 | |
| [a] 356 | Collar | 1 | 35010 | |
| 357 | Pin | 1 | Y178-77 | |
| 358 | Pin | 1 | Y178-114 | |
| 359 | Chain Connector | 13 | 47114269 | |
| [a] 360 | Ball | 1 | Y16-6 | |
| 361 | Spring | 1 | MLK-25 | |
| 362 | Stop Ring | 1 | MLK-259 | |
| **Top Hook Assembly** | | | | |
| [a] 363 | Hook Assembly (Includes 345-349) | 1 | MLK-KS304 | CE110-KBB377 |
| - - - | Hook | 1 | CE110-KS304 | CE120-BB377X |
| [a] | Latch Kit | 1 | 35023 | - - - |
| [a] 345 | Bearing | 1 | R4810-105 | |
| 346 | Thrust Washer | 2 | CE110-596 | |
| 347 | Hook Nut (includes 348 and 349) | 1 | - - - | CA105-R305A |
| [a] 348 | Retainer | 1 | MR10-375 [b] | |
| 349 | Hook Pin | 1 | - - - | MLK-826 |
| 350 | Hook Yoke | 1 | MR10-590B | |
| [a] 364 | Pin | 2 | MR-964 | |
| **Label for Bottom Hook Assembly** | | | | |
| [c] | for 1/4 ton ML250K and ML250KS | 2 | 48379929 | |
| [c] | for 1/2 ton ML500K and ML500KS | 2 | 48379937 | |

[a] Recommended Spare
[b] Also used on the bottom block assembly on hoist versions prior to 02/2010.
[c] Indicates Not Illustrated

***Notes:***

- *For ML250K and ML500K: Stop Ring (362) and Spring (361) are required to prevent damage to the Hoist.*
- *For models ML250KS, ML250KR and ML500KS: Stop Ring (362) and Spring (361), are not necessary for these units due to reduced operating speeds. This will decrease the minimum hook to beam distance in full UP position by approximately 4 in. (100 mm).*

# Single Line Hoist Hook Assembly (spark resistant)

**Figure 12. MHP3252**

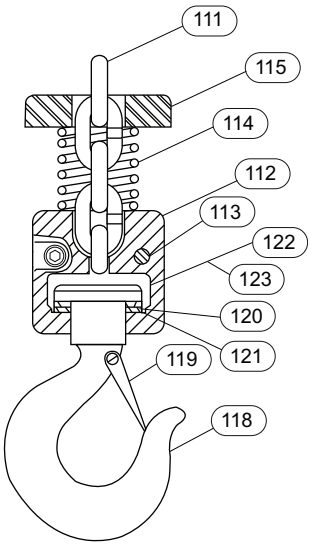


**Table 6. Single Line Hoist Hook Assembly — Parts List**

| Item | Part Description | Total Qty | Part Number |
|---|---|---|---|
| | | | Spark Resistant (1/2 t max) |
| **Bottom Hook and Block Assembly** | | 1 | MLK-KR463 |
| [a] | Hook Assembly (includes 118 and 119) | 1 | CA-SR304N |
| 112 | Hook Block | 2 | MLK-R463 (stainless) |
| 113 | Bolt | 2 | MLK-461 |
| 114 | Spring | 1 | MLK-25 (plated) |
| 115 | Stop Ring | 1 | MLK-R259 (aluminum) |
| 118 | Hook | 1 | CA-R304N (bronze) |
| [b] 119 | Latch kit | 1 | D01-S4055N |
| [b] 120 | Bearing | 1 | R4810-105 |
| [b] 121 | Thrust Washer | 2 | CE110-596 |
| 122 | Hook Nut | 1 | CA105-R305A |
| [b] 123 | Nut Pin | 1 | MLK-826 |

[a] Indicates Not Illustrated
[b] Recommended Spare

***Notes:***

1. *For ML250K and ML500K: Stop Ring (115) and Spring (114) are required to prevent damage to the Hoist. For models ML250KS, ML250KR and ML500KS: Stop Ring (115) and Spring (114), are not necessary for these units due to reduced operating speeds. This will decrease the minimum hook to beam distance in full UP position by approximately 4 in. (100 mm).*
2. *Refer to Figure 11, p. 16 and Parts List for top hook.*

# Double Line Hoist Hook Assembly

Figure 13. MHP3254

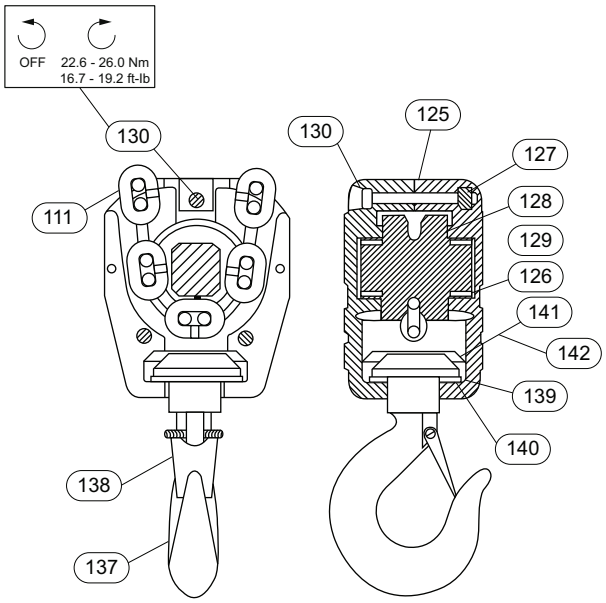


Figure 14. MHP3253

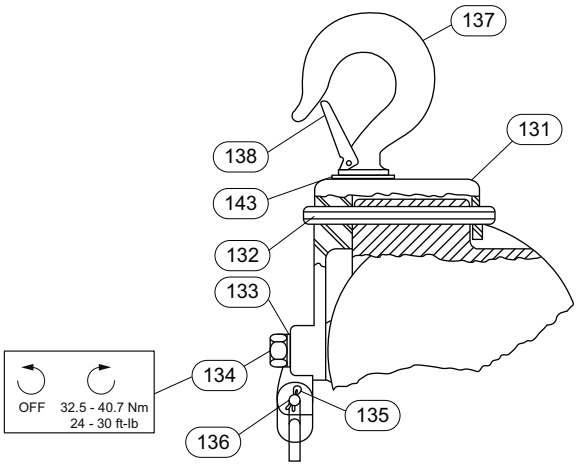


**Table 7. Double Line Hoist Hook Assembly — Parts List**

| Item | Part Description | Total Qty | Part Number | | | |
|---|---|---|---|---|---|---|
| | | | Standard (1 t max) | Spark Resistant (1/2 t max) | Bronze (1 t max) | Bullard (1 t max) |
| | | | ML1000K and ML1000KS | ML500KR | ML1000K and ML1000KS | ML1000K and ML1000KS |
| **Bottom Block Assembly** (includes 125-130, 137-142) | | 1 | ML100K-A378 | CA110-AR378 | 47683214001 | ML1000K-KBB378 |
| 125 | Hook Block | 2 | CE120-B378 (Aluminum) | CA110-BR378 (Aluminum) | CE120-B378 (Aluminum) | CE120-B378 (Aluminum) |
| (a) | Nameplate | 2 | - - - | CA110SR-99 | - - - | - - - |
| (a) | Drive Screw (pack of 12) | 8 | - - - | R4K-302- 12 | - - - | - - - |
| (b) 126 | Bearing | 2 | 0C9-593 | | | |
| 127 | Thread Inserts | 3 | CE120-38 | | | |
| 128 | Thrust Washer | 2 | CE120-80 | | | |
| 129 | Pocket Wheel | 1 | CE120-380 | | | |
| 130 | Bolt | 3 | CE120-312 | | | |
| **Top Hook Assembly** (includes 131-143) | | 1 | ML1000K-K590A | ML500KR-K590A | ML500KR-K590A | ML1000K-KBB590A |
| 131 | Hook Yoke | 1 | ML1000K-590A | | | |
| 132 | Pin | 2 | ML1000K-964 | | | |
| 133 | Lockwasher | 2 | UW50A30-58 | | | |
| 134 | Bolt | 2 | 51766 | | | |
| (b) 135 | Cotter Pin | 2 | D02-524 | | | |
| (b) 136 | Pin | 1 | ML20-962A | | | |
| **Top/Bottom Hook Assembly** (includes 137-143) | | 1 | ML1000K-KS377 | ML500KR-K377 | ML500KR-K377 | CE120-KBB377 |
| 137 | Hook (Includes 138) | 1 | HRA20A-S377 | CA-SR304N (Bronze) | CA-SR304N (Bronze) | CE120-BB377X |

**Table 7. Double Line Hoist Hook Assembly — Parts List (continued)**

| Item | Part Description | Total Qty | Part Number | | | |
|---|---|---|---|---|---|---|
| | | | Standard (1 t max) | Spark Resistant (1/2 t max) | Bronze (1 t max) | Bullard (1 t max) |
| | | | ML1000K and ML1000KS | ML500KR | ML1000K and ML1000KS | ML1000K and ML1000KS |
| [b] 138 | Latch Kit | 1 | D01-S123 | D01-S4055N | D01-S4055N | - - - |
| [b] 139 | Bearing | 1 | CE110-295 | | | |
| [b] 140 | Thrust Washer | 2 | CE120-596 | | | |
| 141 | Hook Nut | 1 | - - - | CA110-R305 | CA110-R305 | CE120-BB377Y |
| [b] 142 | Hook Nut Pin | 1 | - - - | MLK-826 | | |
| [b] 143 | Retainer Ring (Top Hook Only) | 1 | 51398 | - - - | - - - | - - - |

[a] Indicates Not Illustrated
[b] Recommended Spare

# Trolley Assembly

***Note:*** *The components listed here are the major assemblies required for MLK trolleys. For individual Trolley components, and for trolley maintenance requirements, see the form MHD56083, "Parts, Operation, and Maintenance Manual for Plain, Hand Chain, and Air-Powered Trolley Models TIR6600, TIR132, and RT010".*

**Table 8. Trolley Assembly — Parts List**

| Part Description | Total Qty | Part Number |
|---|---|---|
| **Hoist with manual 'A' flange trolleys ( hoist models containing 'DA' sequence, ex. hoist models MLXXXXXX-XXDAXX-XXXX)** | | |
| **ML250K/ML250KS and ML500K/ML500KS** | | |
| Trolley | 1 | RT010A |
| Lug Adapter kit | 1 | MLK-K425 |
| **For ML250KR Models** | | |
| Trolley | 1 | RT010ASB |
| Lug Adapter kit | 1 | MLK-K425 |
| **For ML500KR Models** | | |
| Trolley | 1 | RT010ASB |
| Lug Adapter kit | 1 | ML1000K-K425A |
| **For ML1000K/ML1000KS** | | |
| Trolley | 1 | RT010A |
| Lug Adapter kit | 1 | ML1000K-K425A |
| **Hoist with manual 'D' flange trolleys (hoist models containing 'DD' sequence, ex. hoist models MLXXXXXX-XXDDXX-XXXX)** | | |
| **For ML250K/ML250KS/ML500K/ML500KS/ML1000K/ML1000KS** | | |
| Trolley | 1 | TIR6600-AP |
| Lug Adapter Kit | 1 | MLK-K444TIR |
| Trolley Wheels | 4 | TR-A431U |
| Trolley Bolt Kit | 1 | TR-KFLGD |
| **For ML250KR/ML500KR** | | |
| Trolley | 1 | TIR6600-AP |
| Lug Adapter Kit | 1 | MLK-K444TIR |
| Trolley Wheels | 4 | TR-A1431U |
| Trolley Bolt Kit | 1 | TR-KFLGA |
| **Hoist with 'hand chain', 'A' flange, trolleys (hoist models containing 'FxxA' sequence, ex. Hoist models MLXXXXXX-XXFxxAXX-XXXX) where 'xx' specifies the drop, in feet, of the hand chain** | | |
| **For ML250K/ML250KS/ML500K/ML500KS/ML1000K/ML1000KS** | | |
| Trolley | 1 | TIR6600-AP |
| Lug Adapter Kit | 1 | MLK-K444TIR |
| Geared Trolley Wheels | 4 | TIR6600S-G-AP |
| Trolley Bolt Kit | 1 | TR-KFLGA |
| Hand Chain (specify drop, ft) | XX | HCCV020ZP |
| **For ML250KR/ML500KR** | | |
| Trolley | 1 | TIR6600-AP |
| Lug Adapter Kit | 1 | MLK-K444TIR |
| Geared Trolley Wheels | 4 | TIR6600B-G-AP |
| Trolley Bolt Kit | 1 | TR-KFLGA |
| Hand Chain (specify drop, ft) | XX | HCCV020ZP |
| **Hoist with 'hand chain', 'D' flange, trolleys (hoist models containing 'FxxD' sequence, ex. Hoist models MLXXXXXX-XXFxxDXX-XXXX) where 'xx' specifies the drop, in feet, of the hand chain** | | |
| **For ML250K/ML250KS/ML500K/ML500KS/ML1000K/ML1000KS** | | |
| Trolley | 1 | TIR6600-AP |
| Lug Adapter Kit | 1 | MLK-K444TIR |

**Table 8. Trolley Assembly — Parts List (continued)**

| Part Description | Total Qty | Part Number |
|---|---|---|
| Geared Trolley Wheels | 4 | TIR6600S-G-AP |
| Trolley Bolt Kit | 1 | TR-KFLGD |
| Hand Chain (specify drop, ft) | XX | HCCV020ZP |
| **For ML250KR/ML500KR** | | |
| Trolley | 1 | TIR6600-AP |
| Lug Adapter Kit | 1 | MLK-K444TIR |
| Geared Trolley Wheels | 4 | TIR6600B-G-AP |
| Trolley Bolt Kit | 1 | TR-KFLGD |
| Hand Chain (specify drop, ft) | XX | HCCV020ZP |
| **Hoist with powered, 'A' flange, trolleys (hoist models containing 'HA' sequence, ex. Hoist models MLXXXXXX-XXHAXX-XXXX)** | | |
| **For ML250K/ML250KS/ML500K/ML500KS/ML1000K/ML1000KS** | | |
| Trolley | 1 | TIR6600-AP |
| Lug Adapter Kit | 1 | MLK-K444TIR |
| Motorized Trolley Wheels | 4 | TIR6600S-G-AP |
| Trolley Bolt Kit | 1 | TR-KFLGD |
| Hand Chain (specify drop, ft) | XX | HCCV020ZP |
| **For ML250KR/ML500KR** | | |
| Trolley | 1 | TIR6600-AP |
| Lug Adapter Kit | 1 | MLK-K444TIR |
| Motorized Trolley Wheels | 4 | TIR6600B-G-AP |
| Trolley Bolt Kit | 1 | TR-KFLGD |
| Hand Chain (specify drop, ft) | XX | HCCV020ZP |
| **Hoist with powered, 'D' flange, trolleys (hoist models containing 'HD' sequence, ex. Hoist models MLXXXXXX-XXHDXX-XXXX)** | | |
| Trolley | 1 | TIR6600-AP |
| Lug Adapter Kit | 1 | MLK-K444TIR |
| Motorized Trolley Wheels | 4 | TIR6600B-0-AP |
| Trolley Bolt Kit | 1 | TR-KFLGA |
| **For ML250K/ML250KS/ML500K/ML500KS/ML1000K/ML1000KS** | | |
| Trolley | 1 | TIR6600-AP |
| Lug Adapter Kit | 1 | MLK-K444TIR |
| Motorized Trolley Wheels | 4 | TIR6600S-0-AP |
| Trolley Bolt Kit | 1 | TR-KFLGD |
| **For ML250KR/ML500KR** | | |
| Trolley | 1 | TIR6600-AP |
| Lug Adapter Kit | 1 | MLK-K444TIR |
| Motorized Trolley Wheels | 4 | TIR6600B-0-AP |
| Trolley Bolt Kit | 1 | TR-KFLGD |

# Installation Instructions for Fabric Container Kits

Refer to Figure 15, p. 23 and Figure 16, p. 23.

**⚠ WARNING**

**Disconnect the hoist from the air supply before installing a chain container kit.**

**Figure 15. MHP3236**

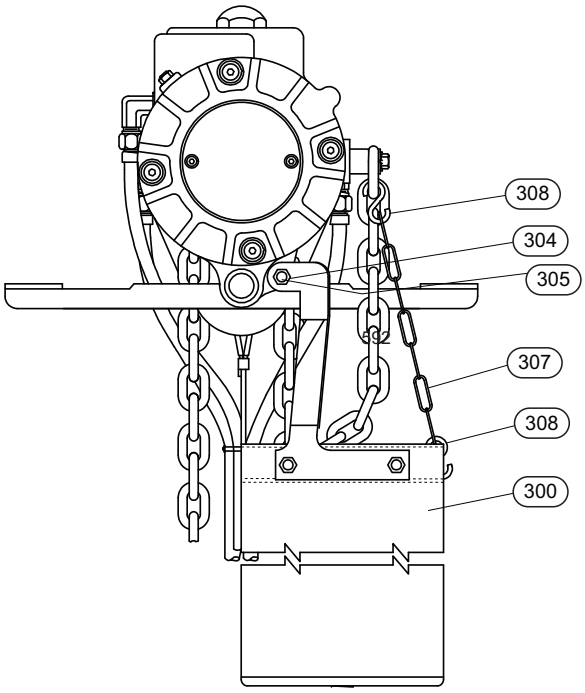


1. Insert a container bolt (305) through the boss on the hoist housing and into the brackets (301 and 302). Retain the container with the bracket bolt nuts (304).

***NOTICE***

**If the container is to be allowed to swing outward, tighten the nuts to within one turn of being fully tight. This will allow the container to swing away from a load.**

2. Apply the balance chain (307) to the container and hoist using the S-Hooks (308). Adjust the length of the chain to prevent the load chain from rubbing on the container.

**Figure 16. Top View of Chain Container (MHP3237)**

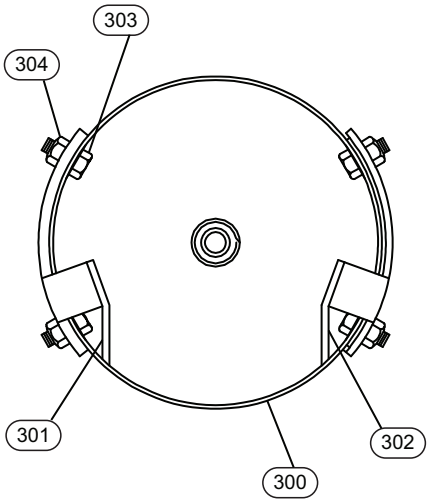

## Installation Instructions for Fabric Container Kits

| Item | Part Description | Total Qty | Part Number |
|---|---|---|---|
| **Fabric Chain Container Kit** | | | |
| 300 | for ML250K or ML500K Hoists with up to 17 ft lift or ML1000K Hoists with up to 9 ft lift | 1 | ML50K-K749-I7 |
| | for ML250K or ML500K Hoists with up to 45 ft lift or ML1000K Hoists with up to 23 ft lift | | ML50K-K749-45 |
| 301 | Left Bracket | 1 | ML50K-748 |
| 302 | Right Bracket | 1 | ML50K-747 |
| 303 | Bracket Bolt | 4 | R2N-103 |
| 304 | Bracket Bolt Nut | 6 | ML50K-394 |
| 305 | Chain Container Bolt | 2 | 5080-638-4 |
| 306 | Balance Chain | 1 | CA110-240-1/2 |
| 307 | S-Hook | 2 | D02-421 |
| **Metal Chain Container Kits** | | | |
| 300 | for ML250K or ML500K Hoists with up to 13 ft or ML1000K Hoists with up to 6.5 ft lift | 1 | ML10-K749 |
| | for ML250K or ML500K Hoists with up to 26 ft lift or ML1000K Hoists with up to 13 ft lift | | ML20-K749A |
| | for ML250K or ML500K Hoists with up to 40 ft lift or ML1000K Hoists with up to 20 ft lift | | ML20K-749-20 |
| | for ML250K or ML500K Hoists with up to 80 ft lift or ML1000K Hoists with up to 40 ft lift | | MLK-K750-80 |
| [a] | Screw | 2 | M0V010AA-634 |
| [a] | Nut | 2 | MR-37 |

[a] Indicates Not Illustrated

# Accessories

| FRL Kit Part Number | Filter Part Number | | Regulator Part Number | Lubricator Part Number | | Size NPTF |
|---|---|---|---|---|---|---|
| | Polycarbonate Bowl | Metal Bowl | | Polycarbonate Bowl | Metal Bowl | |
| C38341-810 | F35341-400 | F35341-410 | R37341-600 | L36341-100 | L36341-110 | 1/2″ |
| C38451-810 | - - - | F35451-410 | R37451-600 | - - - | L36451-110 | 3/4″ |
| C38461-810 | - - - | F35461-410 | R37461-600 | - - - | L36461-110 | 1″ |

***Note:*** *Metal bowls include sight gauges. Polycarbonate bowls include a metal bowl guard.*

# Repair and Conversion Kits

Recommended Spare Part Kit: MHLK-HSK includes all recommended spare parts for MLK hoists.

**Fabric Chain Container:**

- Includes chain container, brackets and all hardware necessary for installation on a hoist.
- No. ML50K-K749-17 (03551066) for use on a single line hoist with up to a 17 ft (5 m) lift and on a double line hoist with up to a 9 ft (2.7 m) lift.
- No. ML50K-K749-45 (03551074) for use on a single line hoist with up to a 45 ft (14 m) lift and on a double line hoist with up to a 23 ft (7 m) lift.

**Metal Chain Containers:**

- No. ML10-K749 for use on a single line hoist with up to 13 ft (4 m) lift and on a double line hoist with up to 6.5 ft (2 m) lift.
- No. ML20-K749A for use on a single line hoist with up to 26 ft (8 m) lift and on a double line hoist with up to 13 ft (4 m) lift.
- No. ML20-K749-20 for use on a single line hoist with up to 40 ft (12 m) lift and on a double line hoist with up to 20 ft (6 m) lift.
- No. MLK-K750-80 for use on a single line hoist with up to 80 ft (24 m) lift and on a double line hoist with up to 40 ft (12 m) lift.

**Pendant Conversion Kit:**

- Includes all components including hose and strain relief cable necessary to convert a pull chain throttle hoist to pendant control operation.
- Length of pendant hose must be specified when ordering. No. MLK-AL269C-XX for use on all MLK hoists. Pendant length is normally 5 ft (1.5 m) shorter than lift.

**Pull Chain Conversion Kit:**

- Includes all components necessary, except the pull chains, to convert a pendant throttle hoist to pull chain control operation.
- No. MLK-K415A for use on all MLK hoists. Order pull chains separately.
- No. 37657-XXX-X (04081154) pull chain for use on standard MLK hoists. Specify total length of two required pull chains.
- No. D02-1413 (03170685) pull chain for use on spark resistant MLK hoists. Specify total length of two required pull chains.

**Valve Chest Conversion Kit:**

- Includes all components necessary to convert Valve Chests used on Hoists with second letter of the Serial Number A through G or with second and third letters of the Serial Number HA, HB or HC to the same style Valve Chest used on Hoists with second letter of the Serial Number other than A through G or with second and third letters of the Serial Number other than HA, HB or HC. No. MLK-K545B (03835519).

**Manual Brake Release Kit:**

- Includes all the components for a manual release brake and/or 200% brake capability. No. MLK-K390 (03721685) for use on all MLK Hoists.

**For All MLK Hoists:**

- Pendant No. MLK-K122B (04306551) Strain-relief chain CA110-B240 (03457769) Specify feet of lift.
- Motor hose (2 required) 50923 (03990215) Specify feet of lift.
- Hoist hose (3 required) BH6C (04306510) Specify feet of lift.
- (For lift length greater than 20 ft, 2 pieces each of hose quick exhausts 20417(71069579) and MR-939 (03195484) are required).
- (Double quantity for lift length greater than 50 ft)

**Three-Motor Pendant :**

**For All MLK Hoists:**

- Pendant No. MLK-K1312B (04306544) Strain-relief chain CA110-B240 (03457769) Specify feet of lift.
- Motor hose (2 required) 50923 (03990215) Specify feet of lift.
- Hoist hose (3 required) BH6C (04306510) Specify feet of lift.
- (For lift length greater than 20 ft, 2 pieces each of hose quick exhausts 20417(71069579) and MR-939 (03195484) are required).
- (Double quantity for lift length greater than 50 ft)

**Quick-Exhaust Valves:**

- Must be used on all Hoists with pendant control when hoses exceed 50 ft. (15 m) in length and includes all fittings and clamps. No. MLK-A939 (03619681) for all MLK Hoists.

**Overhaul Gasket Kit:**

- Includes gaskets, O-Rings and seals for ML250K, ML250KR, ML500K, ML500K, and ML1000K hoists.
- No. MLK-K445 (03713740)

**Bullard-Burnham Gate Hooks:**

- No. CE110-KBB377 (03504537) for ML250K and ML500K.
- No. CE120-KBB377 (03504545) for ML1000K.

**Vane and Spring Retrofit Kit:**

- This kit will improve starting and low speed control on hoists not currently so equipped with, No. MLK-KVSR1 (03835451) Retrofit Kit includes illustrated parts 17, 31, 65, 93, and MLK-42 (7), MLK-43 (7), and HLK-640.

**Vane/spring Kit:**

- No. MLK-K4243-7 Kit includes illustrated parts 69 (7) and 69A (7).

**Vane Spring Packet:**

- No. MLK-43-7 Kit includes illustrated part 69A (7).

**Down Valve Assembly:**

- No. MLK-K1102D Assembly includes illustrated part 17.

**Valve Chest Repair Kit:**

- No. MLK-VCK1 Kit includes illustrated parts 18, 19 (2), 21 (4), 22 (2), 24 (2), 25 (2), 27 (2), 29 (2), 30 (2), 31 (2), 33 (2), 40 (2), 41, 42, 43 and 223.

**Brake Kit:**

- No. MLK-ABK1 Kit includes illustrated parts 95 (2), 97 (3), 100, and 101.

**Chain Wheel Kit:**

- No. MLK-CWK1 Kit includes illustrated parts 76, 77, 78, 79, 80, and non-illustrated part ML-741C.

ingersollrandproducts.com

© 2020 Ingersoll Rand