Compact Lift Air Chain Hoist

Models CL125K, CL250K and CL500K

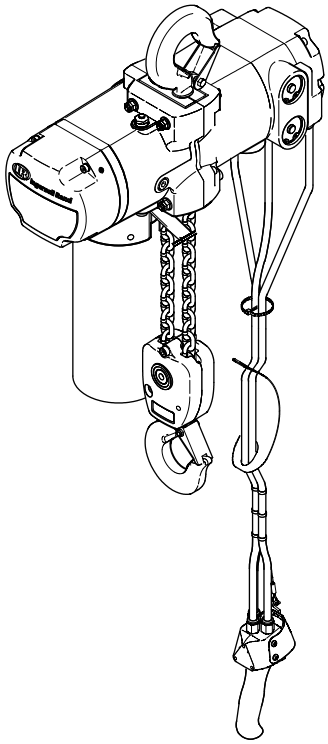

(Dwg. MHP2967)

Product Parts Information

Save These Instructions

Form MHD56407
Edition 5
September 2020
CCN 45550191

Only allow **Ingersoll Rand** trained technicians to perform maintenance on this product. For additional information contact **Ingersoll Rand** factory or nearest distributor.

For additional supporting documentation refer to **Table 1, p. 2****.**

Manuals can be downloaded from ingersollrand.com

The use of other than genuine Ingersoll Rand replacement parts may result in safety hazards, decreased performance and increased maintenance and will invalidate all warranties.

Original instructions are in English. Other languages are a translation of the original instructions.

Refer all communications to the nearest **Ingersoll Rand** office or distributor.

Table 1. Product Information Manuals

Publication	Part/Document Number (CCN)
Product Safety Information Manual	MHD56295 (71441281)
Product Safety Information Manual (ATEX), Declaration of Conformity	47682009001
Product Information Manual	MHD56406 (45550183)
Product Maintenance Information Manual	MHD56408 (45550209)
Product Installation and Operation Information Manual (English)	47699816001

Table of Contents

Parts Ordering Information 4
Return Goods Policy 4
Disposal 4
Hoist Body and Top Hook Assembly 5
Reduction Gear and Brake Assembly 7
Valve and Motor Assembly 9
Pendant Assembly 11
Pendant Hose Connection Assembly 13
Bottom Hook Assembly 14
Chain Container Assembly 15

Parts Ordering Information

These products are designed and constructed to provide long, trouble-free service. In time it may be necessary to order and install new parts to replace those that have been subjected to wear.

For your convenience and future reference, it is recommended that the following information be recorded.

Model Number_____

Serial Number_____

Date Purchase_____

When ordering replacement parts, please specify the following:

1. Complete model number and serial number as it appears on the data (name) plate.
2. Part number(s) and part description as shown in this manual.
3. Quantity required.

The data (name) plate is located on the product.

NOTICE

- **Continuing improvement and advancement of design may cause changes to this equipment which are not included in this manual. Manuals are periodically revised to incorporate changes. Always check the manual edition number on the front cover for the latest issue.**
- **Sections of this manual may not apply to your product.**
- **The use of other than genuine Ingersoll Rand replacement parts may result in safety hazards, decreased performance and increased maintenance, and will invalidate all warranties.**

Return Goods Policy

Ingersoll Rand will not accept any returned goods for warranty or service unless prior arrangements have been made and written authorization has been provided from the location the goods were purchased.

Products that have been modified without Ingersoll Rand approval, mishandled or overloaded will not be repaired or replaced under warranty. A printed copy of the warranty that applies to this product is provided inside the back cover of the product information manual or in some cases the parts manual.

Disposal

When the life of the product has expired, it is recommended that it be disassembled, degreased and parts separated as to materials so that they may be recycled.

For additional information contact:

Ingersoll Rand
20017 72nd Avenue South
Kent, WA 98032 USA
Phone: (877) 584-0370
Fax: (253) 398-3473

or

Ingersoll Rand
Douai Operations
529, Avenue Roger Salengro
59450 Sin Le Noble, France
Phone: (33) 03-27-93-08-08
Fax: (33) 03-27-93-08-00

Hoist Body and Top Hook Assembly

Figure 1. Hoist Body and Top Hook Assembly - Exploded View

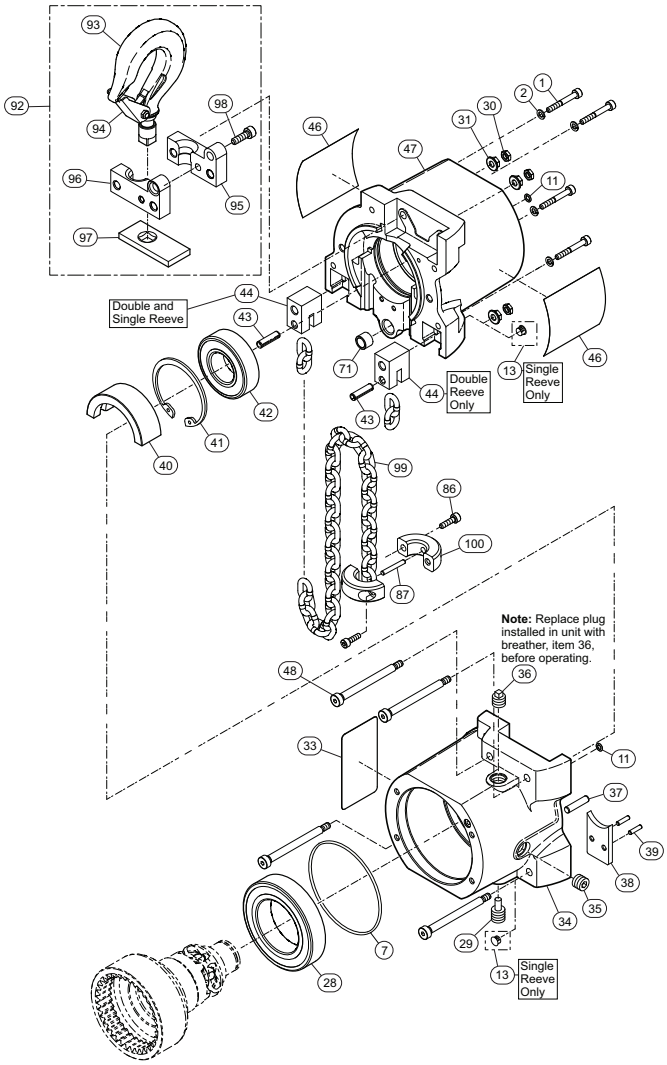

(Dwg. MHP2951)

Table 2. Hoist Body and Top Hook Assembly - Parts List

Item No.	Part Description	Total Qty	Part Number (CCN)
1	Screw, Cap	4	119M2A132B
2	Lockwasher	4	500M5EG7B
7 [a]	O-Ring	1	309M11BN2X75
11 [a]	O-Ring	2	309M11BN15X3
13	Plug (125/250 kg)	2	301A11PS27
28	Bearing	1	CL250K-988
29	Drain Plug	1	150T-29
30	Jam Nut (125/250 kg)	3	19M4JS7M3
	Jam Nut (500 kg)	4	
31	Nut, Flanged (125/250 kg)	3	502M4AB01M3
	Nut, Flanged (500 kg)	4	
33	Label, Warning	1	MTK-147
34	Gear Housing	1	CL250K-140

Table 2. Hoist Body and Top Hook Assembly - Parts List (continued)

Item No.	Part Description	Total Qty	Part Number (CCN)
35	Pipe Plug	1	R2-227
36	Breather [b]	1	CL250K-188
37	Dowel Pin	2	17M13B239
38	Splitter	1	CL250K-485
39	Dowel Pin	2	17M13B158
40	Chain Guide	1	CL250K-6
41	Retainer Ring	1	161M13N52P1
42	Bearing	1	26A19X2052RS HABEC1
43	Spring Pin (125 / 250 kg)	1	200M13S133PL
	Spring Pin (500 kg)	2	
44	Attachement Link (125 / 250 kg)	1	CL250K-224
	Attachement Link (500 kg)	2	
46	Capacity Label for CL125K	2	CL125K-99
	Capacity Label for CL250K		CL250K-99
	Capacity Label for CL500K		CL500K-99
47	Motor Housing	1	CL250K-40
48	Screw, Shoulder (125 / 250 kg)	3	121M2A418BK
	Screw, Shoulder (500 kg)	4	
71	Bushing	1	212M19SB08X1 1X08
86	Screw, Cap	2	119M2A701B
87	Dowel Pin	1	17M13B195
92	Replacement Kit, CLK Top Block Standard Hook (includes 93,94,95,96,97 and 98)	1	47600019001
	Replacement Kit, CLK Top Block Bullard Hook (includes 93,94,95,96,97 and 98)		47600019002
93	Upper Hook	1	- - -
94	Hook Latch Assembly	1	CL250K-2DS0D1
95	Upper Hook Block A	1	- - -
96	Upper Hook Block B	1	
97	Alignment Plate	1	
98	Screw, Cap	1	
99	Chain	[c]	CL250K-745
100	Chain Stop Kit (includes 86 & 87)	1	CL250K-K80

[a] Recommended spares
[b] Replace plug (Y17-10-C) shipped with product, with Breather item (36).
[c] Specify length as required, order in ft, specify single or double reeve.

Note: *Item Hook Latch Assembly is used on both top and bottom hooks.*

Table 3. Kit:

Item No.	Part Description	Total Qty	Part Number
- - -	Restraining Cable Kit, CLK	1	47604156001

Reduction Gear and Brake Assembly

Figure 2. Reduction Gear and Brake Assembly - Exploded View

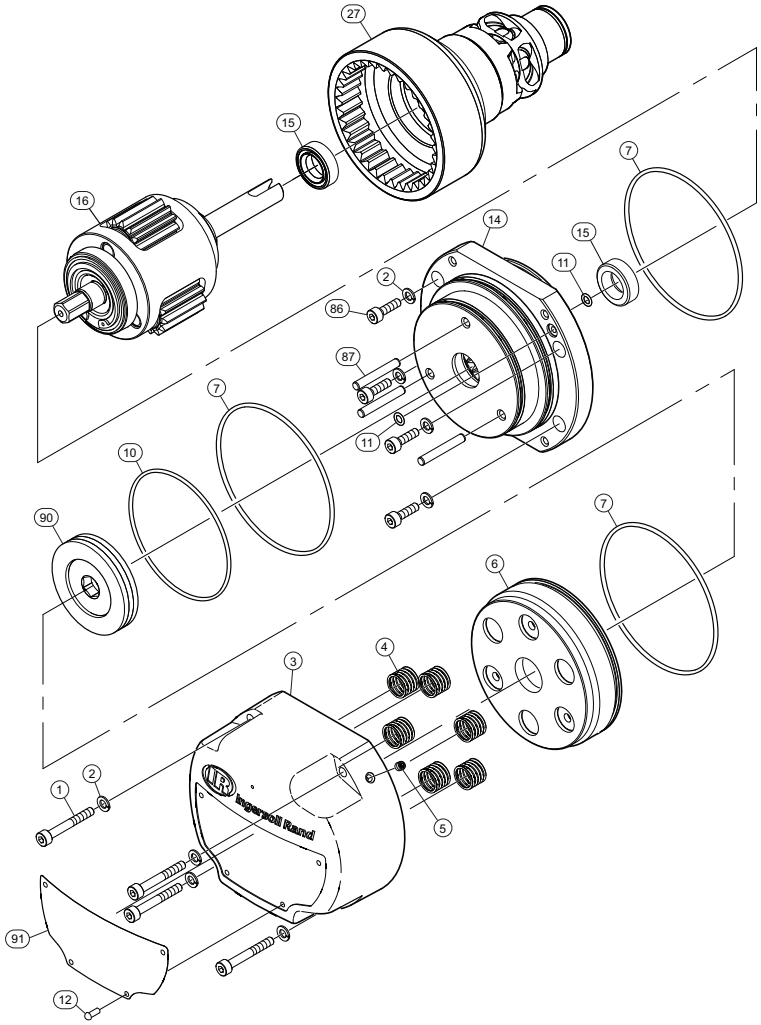

(Dwg. MHP2953)

Table 4. Reduction Gear and Brake Assembly - Parts List

Item No.	Part Description	Total Qty	Part Number (CCN)
1	Screw, Cap	4	119M2A132B
2	Lockwasher	8	500M5EG7B
3	Piston Housing	1	CL250K-395
4	Spring	6	CL250K-832
5	Screw, Set	1	107M2K104
6	Piston	1	CL250K-809
7	O-Ring	3	309M11BN2X75
10	O-Ring	1	309M11BN2X65
11	O-Ring	2	309M11BN15X3
12	Rivet	4	Y60-44
14	Gear Case	1	CL250K-37
15	Seal	2	308M11N01
16	Gear Frame Assembly	1	CL250K-A8
27	Pocket Wheel	1	CL250K-740

Table 4. Reduction Gear and Brake Assembly - Parts List (continued)

Item No.	Part Description	Total Qty	Part Number (CCN)
86	Screw, Cap	4	119M2A701B
87	Dowel Pin	3	17M13B195
90	Brake Disc Assembly	1	CL250K-A834
91	Data (name) Plate	1	[a]

[a] Serial and model number is required for replacement orders of Data (Name) Plate, item (91).

Table 5. Kit:

Item No.	Part Description	Total Qty	Part Number
[a]	Brake Tune-up Kit (includes 4, 7, 10, 11 and 90)	1	CL250K-TK834

[a] Recommended spares

Valve and Motor Assembly

Figure 3. Valve and Motor Assembly - Exploded View

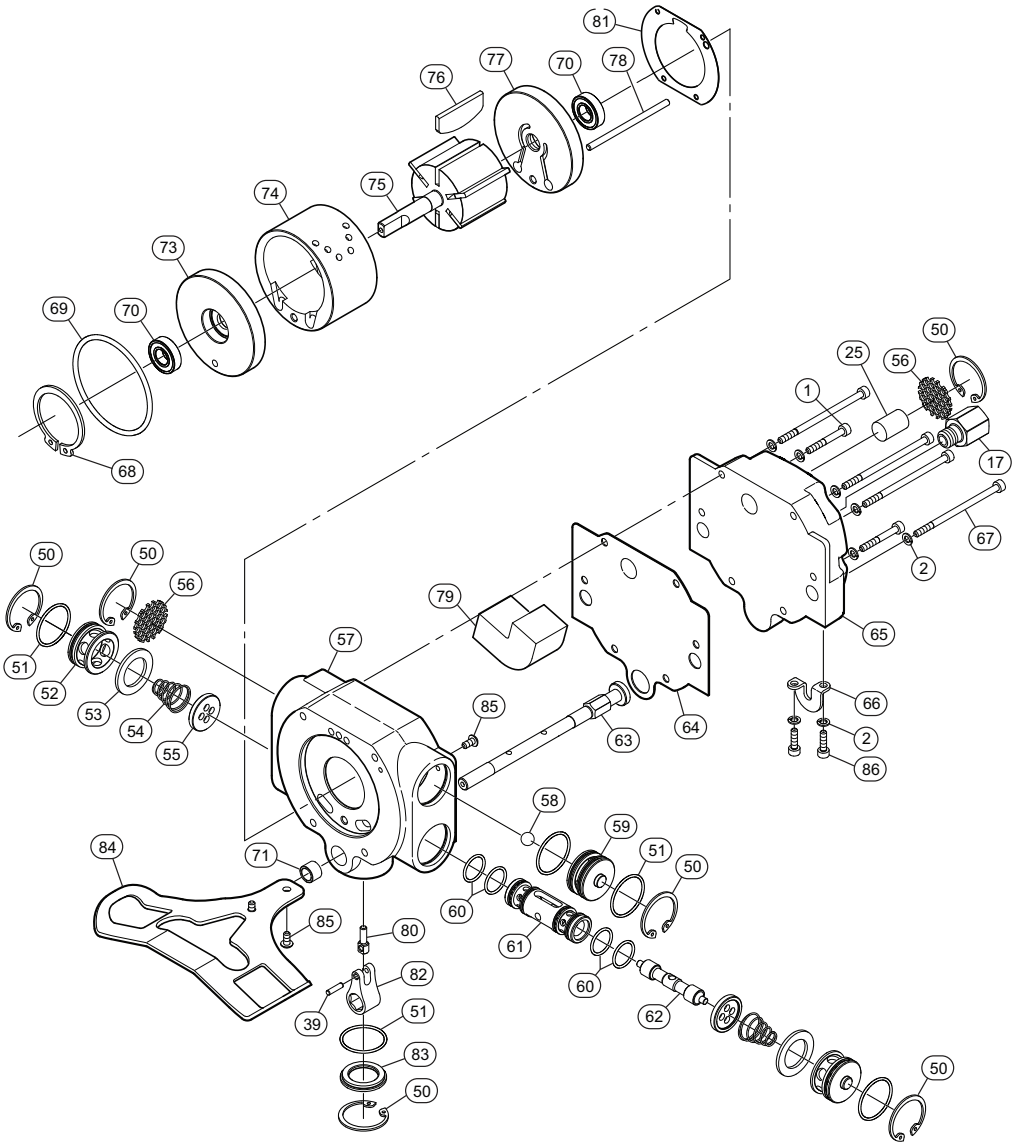

(Dwg. MHP4234)

Table 6. Valve and Motor Assembly - Parts List

Item No.	Part Description	Total Qty	Part Number
1	Screw, Cap	4	119M2A132B
2	Lockwasher	8	500M5EG7B
17	Inlet Strainer	1	CL250K-A465
25	Muffler	1	CL250K-311B
39	Dowel Pin	1	17M13B158
50	Retainer Ring	6	161M13N28P1
51	O-Ring	5	309M11BN15X 25
52	Inlet Cap	2	CL250K-238
53	Buffer	2	CL250K-50
55	Spring	2	CL250K-250
55	Washer	2	CL250K-248
56	Muffler Screen	2	CL250K-310

Table 6. Valve and Motor Assembly - Parts List (continued)

Item No.	Part Description	Total Qty	Part Number
57	Valve Chest	1	CL250K-A241
58	Ball	1	309A11N08
59	Shuttle Valve Cartridge	1	CL250K-302
60	O-Ring	4	309M11BN15X 135
61	Valve Cartridge	1	CL250K-347
62	Valve	1	CL250K-346
63	Shaft, Limit Switch	1	CL250K-255
64	Gasket	1	CL250K-283
65	Valve Cover	1	CL250K-102
66	Support	1	MLK-450
67	Screw, Cap	4	119M2A140B
68	Retainer Ring	1	162M13N25P1
69	O-Ring	1	309M11BN3X60
70	Bearing	2	CL250K-24
71	Bearing	1	212M19SB08X1 1X08
73	Endplate, Front	1	CL250K-11
74	Cylinder	1	CL250K-3
75	Rotor	1	CL250K-53
76	Blade	6	CL250K-42
77	Endplate, Rear	1	CL250K-12
78	Dowel Pin	1	CL250K-98
79	Muffler	1	CL250K-311A
80	Pivot Arm, Upper	1	CL250K-251
81	Gasket	1	CL250K-292
82	Pivot Arm, Lower	1	CL250K-254
83	Valve Cap	1	CL250K-943
84	Lever, Limit Switch	1	CL250K-222
85	Screw, Cap	3	134M2AA61B
86	Screw, Cap	2	119M2A701B

Table 7. Kit:

Item No.	Part Description	Total Qty	Part Number
[a]	Motor Tune-up Kit (includes 25, 54, 64, 69, 70, 76, 79 and 81)	1	CL250K-TK53

[a] Recommended spares

Pendant Assembly

Figure 4. Standard Pendant - Exploded View

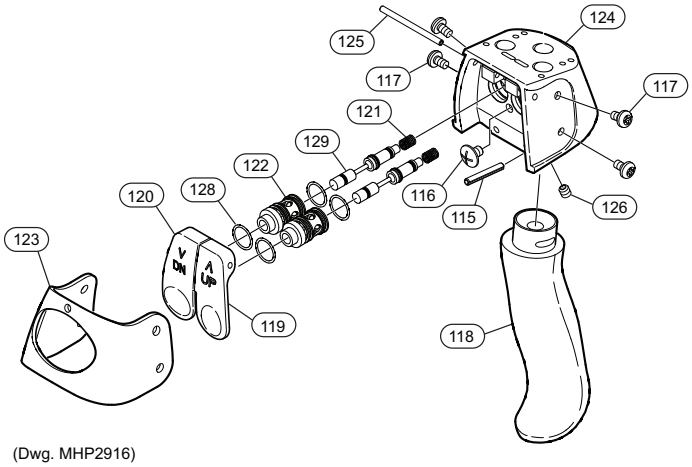

Figure 5. Pendant with Emergency Stop - Exploded View

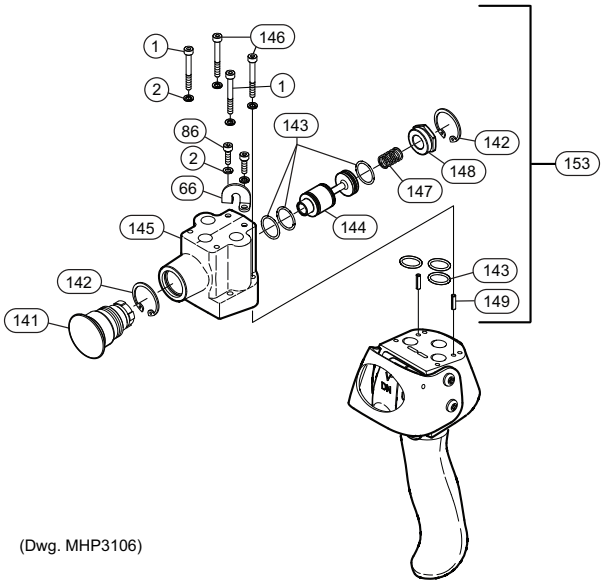

Table 8. Pendant Assembly - Parts List

Item No.	Part Description	Total Qty	Part Number	
			Standard Pendant	Pendant with Emergency Stop
114	Pendant Assembly	1	45648177	45660073
1	Screw, Cap	2	- - -	Order Item 153
2	Lockwasher	6		500M5EG7B
66	Strain Relief Support	1		MLK-450
86	Screw	2		119M2A701B

Table 8. Pendant Assembly - Parts List (continued)

Item No.	Part Description	Total Qty	Part Number	
			Standard Pendant	Pendant with Emergency Stop
115	Roll Pin	1	Order Item 114 (Not Sold Separately)	
116	Screw	1		
117	Screw, Set	4		
118	Handle	1		
119	Lever, Up	1		
120	Lever, Down	1		
121	Spring	2		
122	Valve Bushing	2		
123	Guard	1		
124	Housing	1		
125	Spring Pin	1		
126	Screw, Set	1		
127	O-Ring	3		
128	O-Ring	4		
129	Valve	2		
141	Emergency Stop Buttom	1	- - -	45940327
142	Retainer Ring	2		Order Item 153
143	O-Ring	3		
144	Valve	1		
145	Valve Block	1		
146	Screw, Cap	2		
147	Spring	1		
148	Valve Cap	1		
149	Pin	2		
150	O-Ring	3		

Table 9. Kits:

Item No.	Part Description	Total Qty	Part Number
[a]	Pendant Tune-up Kit without Emergency Stop (includes 121, 122, 125, 128 and 129)	1	45665585
[a]	Emergency Stop Tune-up Kit (includes 143, 144, 147 and 150)	1	47083548
153	Emergency Stop Retro-fit Kit (includes 1, 2, 66, 86, 141 through 150)	1	45667391

[a] Recommended spares

Pendant Hose Connection Assembly

Figure 6. Pendant Hose Connection Assembly - Exploded View

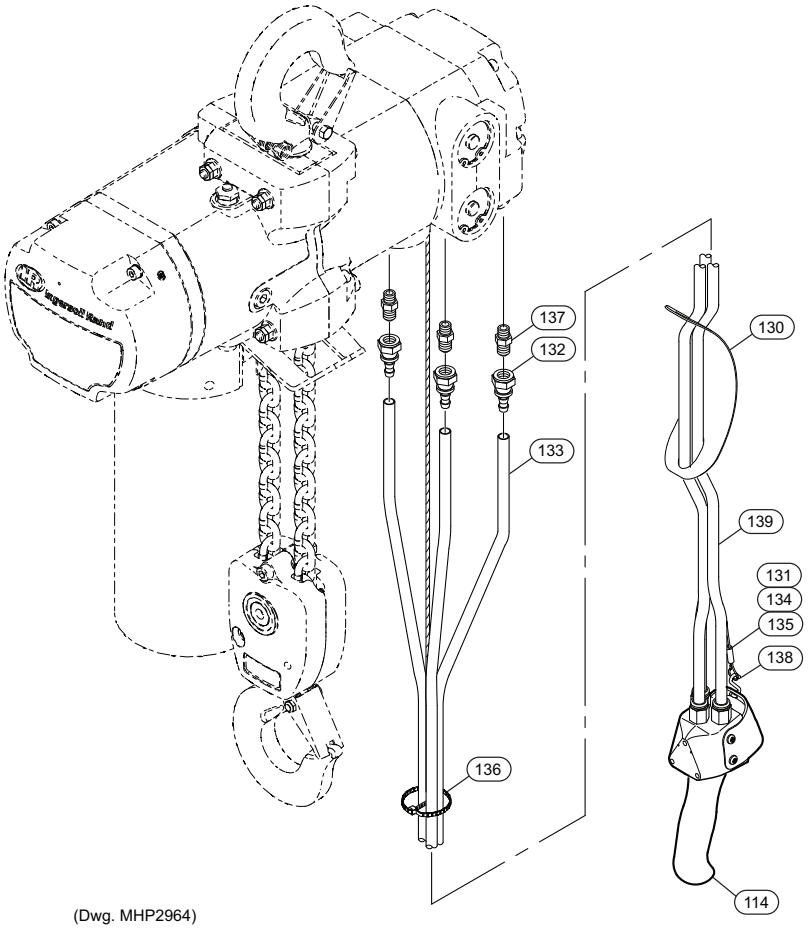

Table 10. Pendant Hose Connection Assembly - Parts List

Item No.	Part Description	Total Qty	Part Number (CCN)
114	Pendant	1	45648177
130	Warning Tag	1	04612776
131	Strain Relief Cable	(a)	33323-XXX-X
132	Fitting, Swivel	6	53954
133	Hose	(a)	BH6C
134	Strain Relief Clamp	2	32356
135	Strain Relief Eye	2	31477
136	Cable Tie	(b)	44560
137	Adapter	6	10565
138	'S' Hook	1	D02-421
139	Pendant Hose Assembly (c)	(a)	CL250K-A130-X
140	Exhaust Valve Kit	(a)	MR-939-6

(a) As required. Order item 139 in ft (m), maximum length 40 feet. Item 140 not shown, qty of 2 required after 15 and 30 ft, qty of 4 required for 40 ft, to be installed equally spaced within the hose length.
(b) Order as required; Number of cable ties is one per foot minus 1 foot with each cable drop length, example: 6 ft drop requires 5 cable ties.
(c) Includes items 130 - 136 and 138.

Bottom Hook Assembly

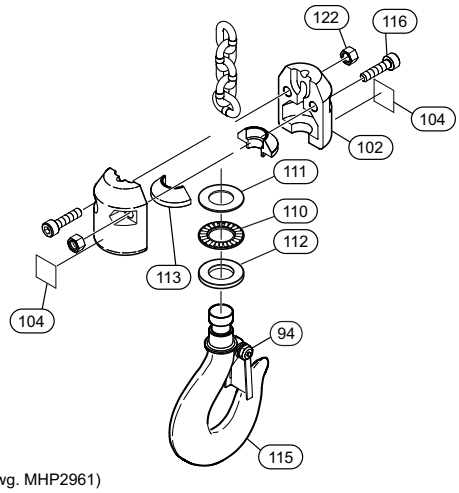

(Dwg. MHP2961)

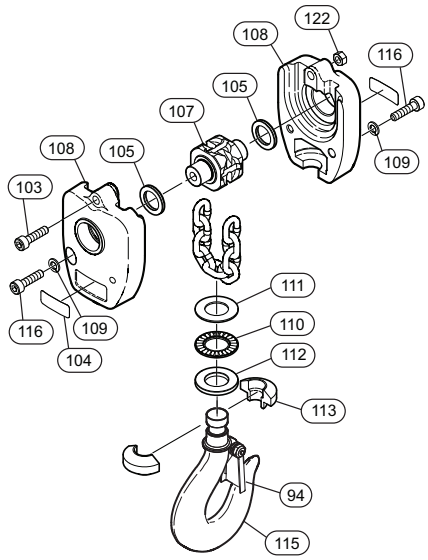

(Dwg. MHP2968)

Table 11. Bottom Hook Assembly - Parts List

Item No.	Part Description	Total Qty	Part Number		
			CL125K	CL250K	CL500K
94	Hook Safety Latch (bottom)	1 [a]	CL250K-2DS0D1		
102	Bottom Block (single reeve)	2	CL250K-463		CL500K-A463
103	Screw, Cap	1	—		119M2A163B
104	Capacity Tag	2	CL125K-598	CL250K-598	CL500K-598
105	Thrust Washer	2	—		204A19BSXTRA916
107	Pocket Wheel	1	—		CL500K-740
108	Bottom Block (double reeve)	2	—		CL500K-A463
109	Lockwasher	2	—		500M5C11
110	Needle Bearing	1	209M19X01		
111	Thrust Washer - Thin	1	211M19S11		
112	Thrust Washer - Thick	1	211M19CCS01		
113	Collar	2	CL250K-373		
115	Bottom Hook Assembly (includes item 94)	1	CL250K-590		
	Bottom Hook Assembly (bullard)		CLK250K-376		
116	Screw, Cap	2	119M2A160B		119M2A160B
122	Nut	()	16M4JB6B (2)		16M4JB6B (1)

[a] Hook Latch Assembly is used on both top and bottom hooks.

Chain Container Assembly

Figure 7. Chain Container Assembly - Exploded View

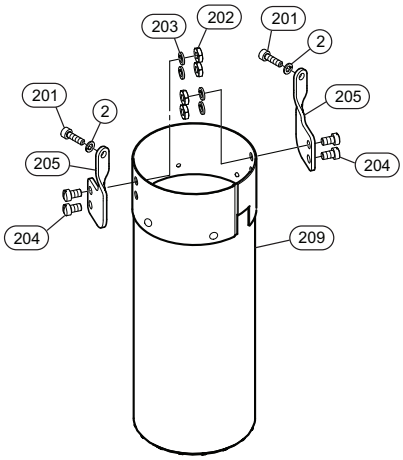

(Dwg. MHP2788)

Table 12. Chain Container Assembly - Parts List

Item No.	Part Description	Total Qty	Part Number		
			CL125K	CL250K	CL500K
- - -	Chain Container Assembly (includes 2, 201 - 205 and 209)	1	CL250K-K749-20		
		1	CL250K-K749-40		
2	Lockwasher	2	500M5EG7B		
201	Screw, Cap	2	119M2A701B		
202	Nut	4	Y22-10-C		
203	Washer	4	Y14-10-C		
204	Screw, Cap	4	Y19-104-C		
205	Bracket	2	CL250K-600		
209	Chain Container [(a)]	1	CL250K-K749-20		
	Chain Container [(b)]	1	CL250K-K749-40		

[(a)] Single Reeve - Up to 20 ft of chain (lift), 125 and 250 kg
Double Reeve - Up to 10 ft of chain (lift), 500 kg
[(b)] Single Reeve - Up to 40 ft of chain (lift), 125 and 250 kg
Double Reeve - Up to 20 ft of chain (lift), 500 kg

ingersollrand.com

© 2020 Ingersoll Rand